OUR TEAM MAKES THE DIFFERENCE

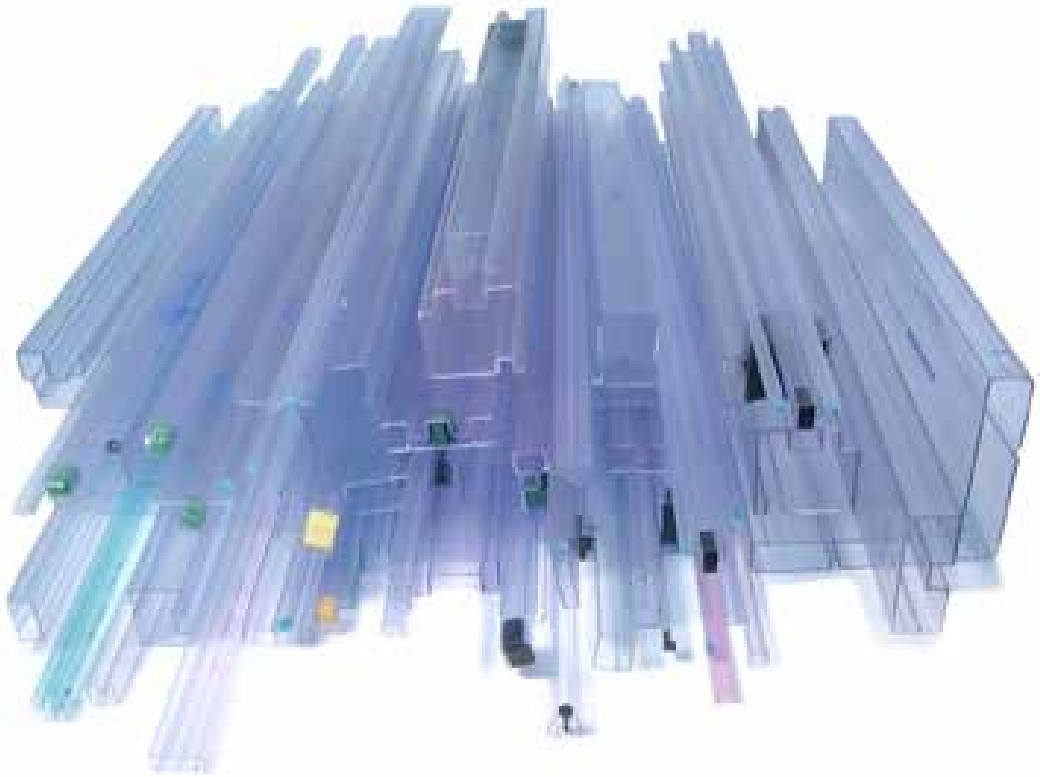

IC Shipping Tube Products Catalog

 Copyright © 1999-2023 ePAK International, Inc. All Rights Reserved

TUBE PRODUCTS

- ePAK features a full line of tubes for all applications
- End pins, plugs and stoppers
- Comprehensive in-house design and custom manufacturing of tube designs for standard as well as specialty products
- Contact ePAK to discuss your tube requirements today

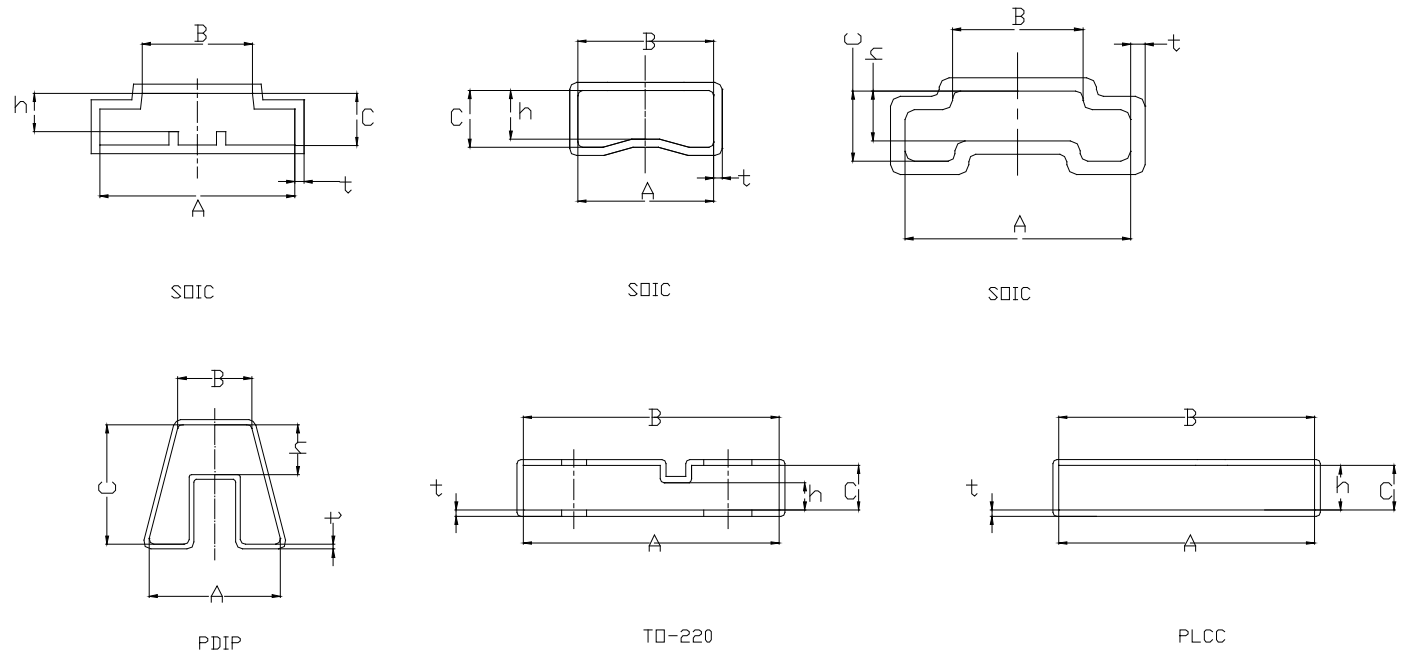

TUBE Dimension Reference – Common Formats Shown

 Copyright © 1999-2023 ePAK International, Inc. All Rights Reserved

TUBE TOOLING

PDIP

Package	ePAK P/N	A	B	C	H	T	L	Pin	Plug	Code
PDIP 300 MIL	CPS PDIP 300MIL STD TUBE	15.240	8.255	13.462	5.207	0.508	508	X		eTU0001
PDIP 300 MIL	DAEWOO PDIP300MIL TUBE	15.240	8.250	13.450	5.200	0.510	508	X		eTU0012
PDIP 300 MIL	FAIRCHILD PDIP 300MIL TUBE	12.900	9.000	11.100	4.200	0.500	500	X		eTU0013
PDIP 300 MIL	300MILS PDIP TUBE	12.450	9.650	10.800	4.320	0.500	508	X		eTU0111
PDIP 300 MIL	3CP29320 TUBE	15.200	8.400	11.200	4.300	0.500	532	X		eTU0015
PDIP 300 MILS (HIGH PROFILE)	300MILS PDIP (High Profile) TUBE	14.220	7.366	11.940	5.160	0.500	508	X		eTU0116
PDIP 600 MIL	600MILS PDIP TUBE	19.939	17.270	10.795	5.210	0.500	508	X		eTU0110
PDIP 600 MIL	600MILS TUBE	20.900	17.400	10.300	5.000	0.800	532	X		eTU0128
3CP29320	3CP29320 TUBE	15.200	8.400	11.200	4.300	0.500	532	X		eTU0160
3CP72696	3CP72696 TUBE	32.40	32.40	9.50	5.50	0.75	532	X		eTU0755
7VCA35BY	7VCA35BY TUBE	26.000	26.000	10.000	5.800	0.700	552		X	eTU0034
7VC617 CY	7VC617 CY TUBE	20.0	20.0	10.8	5.3	0.5	590		X	eTU0211
7VC772DY	7VC772DY TUBE	24.000	24.000	6.800	4.700	0.500	590		X	eTU0033
TSRW19ES	TSRW19ES TUBE	15.72	15.72	24.70	16.76	0.80	506		X	eTU0378
ADI-0098-04	ADI-0098-04 TUBE	21.34	17.15	13.97	5.46	0.76	508			eTU0383
DIP400	DIP400 TUBE	13.80	13.80	10.50	4.20	0.60	520		X	eTU0390
MC-K-0008	MC-K-0008 TUBE	12.00	8.00	11.00	4.80	0.50	500		X	eTU0405
571100000	571100000 TUBE	14.00	9.00	11.00	5.00	0.50	516		X	eTU0604
597A00000	597A00000 TUBE	13.92	8.90	13.50	4.70	0.64	516		X	eTU0602

 Copyright © 1999-2023 ePAK International, Inc. All Rights Reserved

TUBE TOOLING

SOIC

Package	ePAK P/N	A	B	C	H	T	L	Pin	Plug	Code
1	0001 TUBE	12.5	12.5	7.2	4.35	0.6	508		X	eTU0495
0200-0012-16	0200-0012-16 TUBE	11.43	9.27	8.38	6.22	0.61	528			eTU0541
0200-0012-18	0200-0012-18 TUBE	11.43	9.27	9.53	7.37	0.61	528			eTU0542
0200-0012-19	0200-0012-19 TUBE	14.22	10.03	9.14	7.11	0.6	528.07			eTU0516
070718-1	070718-1 TUBE	22.00	22.00	14.20	9.00	0.60	522	X		eTU0739
1-912120-0	1-912120-0 TUBE	18.45	18.45	9.40	6.80	0.70	508		X	eTU0600
10056081-03-001	10056081-03-001 TUBE	29.20	29.20	13.15	5.70	0.80	610		X	eTU0584
10059380-03-001	10059380-03-001 TUBE	33.80	30.80	20.30	16.25	1.00	610		X	eTU0613
10059381-03-001	10059381-03-001 TUBE	29.60	26.60	16.10	12.05	1.00	610		X	eTU0612
10063939-03-001	10063939-03-001 TUBE	30.2	30.2	18.65	11.05	0.8	609.6		X	eTU0640
10082746-03-001	10082746-03-001 TUBE	25.30	25.30	20.40	11.40	0.70	610			eTU0751
1540004-1(2)	1540004-1(2) TUBE	28.1	28.1	12.7	7.1	0.8	250		X	eTU0529
1540040	1540040 TUBE	22.2	22.2	10	8	0.6	558.8		X	eTU0515
165CFF-009-01	165CFF-009-01 TUBE	7.6	7.6	6.4	5.4	0.7	600		X	eTU0643
230-0590	230-0590 TUBE	36.32	36.32	19.05	13.97	1.27	524.51		X	eTU0485
230-0768	230-0768 TUBE	29.46	13.08	23.37	17.78	0.76	524		X	eTU0605
230-0781	230-0781 TUBE	17.78	13.94	16.13	11.43	0.76	533			eTU0597
230-0922	230-0922 TUBE	22.22	17.53	23.62	16.76	0.80	543		X	eTU0599
291B00000	291B00000 TUBE	25.30	15.00	14.50	7.30	0.60	578		X	eTU0587
35001248	35001248 TUBE	6.88	6.88	3.05	2.29	0.51	483		X	eTU0559
3-912120-3	3-912120-3 TUBE	30.00	30.00	15.30	11.70	0.70	508		X	eTU0752
3-912120-4	3-912120-4 TUBE	17.35	17.35	12.8	8	0.7	508		X	eTU0637

Copyright © 1999-2023 ePAK International, Inc. All Rights Reserved

TUBE TOOLING

SOIC (continued)

Package	ePAK P/N	A	B	C	H	T	L	Pin	Plug	Code
3M-900194-6	3M-900194-6 TUBE	8.40	8.40	7.60	3.50	0.80	520		X	eTU0746
3S-030170-5	3S-030170-5 TUBE	20.5	20.5	9.5	3.5	0.75	720	X		eTU0521
3S-070221-3	3S-070221-3 TUBE	21.40	21.40	12.40	2.60	0.80	570	X		eTU0741
48-005(2)	48-005(2) TUBE	9	9	10.2	6.9	0.5	250		X	eTU0527
48-010	48-010 TUBE	19.48	19.48	7.75	6.2	0.76	600			eTU0396
48-011	48-011 TUBE	10	10	9.6	5.6	0.5	600		X	eTU0399
48-012	48-012 TUBE	5.2	3.3	10.5	10.5	0.5	450		X	eTU0449
483401000	483401000 TUBE	11.00	11.00	13.00	8.50	0.50	553		X	eTU0578
4-912072-2	4-912072-2 TUBE	33	33	32	26.8	0.8	508		X	eTU0522
527	527 TUBE	19.40	19.40	10.50	6.30	0.50	544			eTU0672
549	549 TUBE	33.20	33.20	11.50	4.70	0.80	502			eTU0685
5-912077-8	5-912077-8 TUBE	20.2	20.2	10.6	2.6	0.7	540		X	eTU0483
5-912107-8	5-912107-8 TUBE	18.29	18.29	15.85	11.45	0.6	508		X	eTU0498
5-912107-9	5-912107-9 TUBE	23.29	23.29	9.95	7.35	0.70	508		X	eTU0554
598A00000	598A00000 TUBE	13.70	9.00	16.60	10.20	0.64	516		X	eTU0603
6232SMT RA STICK	6232SMT RA STICK TUBE	8.5	8.5	4.2	1.35	0.5	510			eTU0500
6232SMT ST STICK	6232SMT ST STICK TUBE	6	6	6.5	3.3	0.5	510			eTU0499
6-912107-1	6-912107-1 TUBE	23.29	23.29	13.7	11.1	0.7	508		X	eTU0479
7099-0002-001	7099-0002-001 TUBE	5.50	5.50	9.20	4.80	0.60	555		X	eTU0557
7-912107-1	7-912107-1 TUBE	9.3	9.3	23.5	20.8	0.7	508		X	eTU0420
7-912107-5	7-912107-5 TUBE	13.7	13.7	23.29	18.29	0.7	508		X	eTU0401
7-912107-6	7-912107-6 TUBE	20.79	20.79	19.6	15.2	0.6	508		X	eTU0497
7VCD41B-K	7VCD41B-K TUBE	10.3	10.3	9.3	4.35	0.5	515	X		eTU0547

Copyright © 1999-2023 ePAK International, Inc. All Rights Reserved

TUBE TOOLING

SOIC (continued)

Package	ePAK P/N	A	B	C	H	T	L	Pin	Plug	Code
912120-2	912120-2 TUBE	28	28	18.5	15.7	0.9	508		X	eTU0536
912120-4	912120-4 TUBE	17.80	17.80	16.40	12.90	0.70	508		X	eTU0574
912120-5	9-12120-5 TUBE	18.45	18.45	12.70	10.10	0.70	508		X	eTU0575
912120-8	912120-8 TUBE	25.70	25.70	12.70	7.90	0.80	508		X	eTU0611
95 9300 8079 10 195	95 9300 8079 10 195 TUBE	22.9	22.9	17.4	15.8	0.7	610			eTU0645
95 9300 8079 10 196	95 9300 8079 10 196 TUBE	18.4	18.4	12	9.4	0.7	610			eTU0644
99-0221-04(2)	99-0221-04(2) TUBE	15.4	15.4	8.2	5.5	0.8	250		X	eTU0528
99-0327-01	99-0327-01 TUBE	12.80	12.80	8.00	5.30	0.70	430		X	eTU0589
99-0375-01	99-0375-01 TUBE	19.80	15.50	8.40	5.20	0.70	414		X	eTU0607
99-0383-02	99-0383-02 TUBE	11.80	11.80	6.40	4.40	0.60	520		X	eTU0590
99-0432-01	99-0432-01 TUBE	6.60	6.60	11.50	7.15	0.70	610		X	eTU0591
99-0563-01	99-0563-01 TUBE	12.00	11.80	6.40	4.40	0.60	520			eTU0601
99-0749-01	99-0749-01 TUBE	6.80	6.80	13.00	8.60	0.60	610			eTU0558
99-0749-01	99-0749-01 PS TUBE	13	13	6.8	6	0.6	610		X	eTU0641
9-912107-0	9-912107-0 TUBE	49.5	49.5	29	17	1	508		X	eTU0477
9-912107-1	9-912107-1 TUBE	51.4	51.4	42.4	30.4	1	508		X	eTU0478
9-912107-3	9-912107-3 TUBE	14.3	12	19.7	19.7	0.8	508		X	eTU0441
9-912107-4	9-912107-4 TUBE	27.6	24.6	23.1	16.6	0.8	508		X	eTU0440
9-912107-7	9-912107-7 TUBE	30	30	24	12.55	0.8	508		X	eTU0471
9-912107-8	9-912107-8 TUBE	18.4	18.4	15	13.1	0.8	508		X	eTU0535

Copyright © 1999-2023 ePAK International, Inc. All Rights Reserved

TUBE TOOLING

SOIC (continued)

Package	ePAK P/N	A	B	C	H	T	L	Pin	Plug	Code
99-7-H012-000	99-7-H012-000 TUBE	15.40	15.40	8.20	5.50	0.80	414		X	eTU0580
99-7-H013-000	99-7-H013-000 TUBE	18.80	18.80	8.40	4.50	0.70	414		X	eTU0581
99-7-H014-000	99-7-H014-000 TUBE	10.80	10.80	6.40	4.40	0.60	508		X	eTU0582
99-7-H018-000	99-7-H018-000 TUBE	13.00	8.60	6.80	6.00	0.60	610		X	eTU0606
99-7-H021-000	99-7-H021-000 PS TUBE	17.00	17.00	8.60	8.20	0.70	425		X	eTU0686
A00112	A00112 TUBE	7.00	7.00	5.20	4.40	0.60	600			eTU0744
AD-016-04A	AD-016-04A TUBE	27.3	27.3	14.3	3.2	0.8	500		X	eTU0472
ADI-0098-12	ADI-0098-12 TUBE	13.10	7.87	3.70	2.79	0.69	508		X	eTU0564
ADI-0098-22	ADI-0098-22 TUBE	5.16	3.58	1.35	1.02	0.46	173			eTU0384
ADI-0098-23	ADI-0098-23 TUBE	6.81	6.81	2.03	1.14	0.5	509			eTU0385
ADI-0098-24	ADI-0098-24 TUBE	9.4	5.4	2.8	2	0.6	508			eTU0386
CSS5011-1902LSZ	SYSTEM CONNECTOR TUBE	12.90	12.90	8.20	5.60	0.60	600		X	eTU0621
DE3761544401	DE3761544401 TUBE	31.1	2.4	29.4	19	0.8	570			eTU0481
DE3761545801	DE3761545801 TUBE	32.9	2.5	33.8	19.8	0.8	570			eTU0480
FJEXAI0001	FJEXAI0001 TUBE	17.1	17.1	19.8	15.2	0.6	496		X	eTU0484
IDJ-B27.B32-F6T	IDJ-B27.B32-F6T TUBE	14.7	12	9.3	6.8	0.7	625		X	eTU0398
IDJ-D14.21.23-6T	IDJ-D14.21.23-6T TUBE	12.3	12.3	13.7	10.4	0.7	590		X	eTU0382
ITJS-03	ITJS-03 TUBE	15	11.5	9.4	6	0.7	625		X	eTU0400

Copyright © 1999-2023 ePAK International, Inc. All Rights Reserved

TUBE TOOLING

SOIC (continued)

Package	ePAK P/N	A	B	C	H	T	L	Pin	Plug	Code
K-F006	K-F006 TUBE	4.40	4.40	5.20	3.20	0.50	229			eTU0728
LV-1	LV-1 TUBE	7.95	7.95	5.24	3.24	0.55	570		X	eTU0474
MC-48LCC/AS	MC-48LCC/AS TUBE	15.32	15.32	4.95	3.43	0.51	503		X	eTU0540
M-CD-001	M-CD-001 TUBE	25.3	15	14.5	7.3	0.6	578		X	eTU0537
M-CD-002	M-CD-002 TUBE	13.4	13.4	14	10.5	0.5	553		X	eTU0538
M-CD-003	M-CD-003 TUBE	11	11	13	8.5	0.5	553		X	eTU0539
MC-K-0005	MC-K-0005 TUBE	13	13	12	8	0.50	490		X	eTU0671
MC-K-0008	MC-K-0008 TUBE	12	8.5	6	4	0.5	500		X	eTU0328
MC-K-0009	MC-K-0009 TUBE	12	8	6.5	4.8	0.5	500		X	eTU0406
MC-K-0010	MC-K-0010 TUBE	11	7	8.5	4	0.5	500		X	eTU0407
MC-K-0013	MC-K-0013 TUBE	11	8	5	4	0.5	500		X	eTU0530
MC-K-0014	MC-K-0014 TUBE	13	13	6.5	4.4	0.6	500		X	eTU0531
MC-K-0015	MC-K-0015 TUBE	9	9	7.3	6.3	0.6	500		X	eTU0532
MC-K-0016	MC-K-0016 TUBE	13	11	13	7	0.6	500		X	eTU0551
MC-K-0019	MC-K-0019 TUBE	10.00	10.00	5.10	3.60	0.60	500		X	eTU0682
MC-K-0022	MC-K-0022 TUBE	10.00	10.00	3.20	1.50	0.60	500		X	eTU0695
MC-K-0027	MC-K-0027 PS TUBE	8.00	11.00	8.50	4.50	0.50	500		X	eTU0731
MTL-0405-015	MTL-0405-015 TUBE	20.00	20.00	7.60	3.80	0.63	584		X	eTU0586
OKI 64 SDIP(1)	OKI 64 SDIP(1) TUBE	20.10	20.10	10.60	5.30	0.70	550	X	X	eTU0745

Copyright © 1999-2023 ePAK International, Inc. All Rights Reserved

TUBE TOOLING

SOIC (continued)

Package	ePAK P/N	A	B	C	H	T	L	Pin	Plug	Code
P3A476	P3A476 TUBE	16.60	16.60	11.10	6.50	0.70	550		X	eTU0733
P3A477	P3A477 TUBE	16.60	16.60	11.10	4.50	0.70	550		X	eTU0734
PJK-31	PJK-31 TUBE	11.4	9.5	7.3	4.4	0.7	625			eTU0467
QSJ-44546	QSJ-44546 TUBE	12.2	6.2	5.2	4.6	0.6	495		X	eTU0161
SLA-D	SLA-D TUBE	28.60	28.60	7.10	5.70	0.70	510		X	eTU0749
SOIC 150MILS	150MILS SOIC TUBE	6.6	6.6	2.67	2.08	0.5	508		X	eTU0112
AKM SOIC 150 MIL STD	AKM SOIC 150 MIL STD TUBE	0.304	0.304	0.116	0.087	0.017	20		X	eTU0039
SOIC 150MILS	ATMEL SOIC150MIL TUBE	6.604	6.604	2.51	1.905	0.635	508		X	eTU0025
SOIC 150MILS	CPS SOIC 150MIL STD TUBE	18.466	18.466	2.946	2.215	0.432	508		X	eTU0002
SOIC 208MILS	ATMEL SJ SOIC208MIL TUBE	9.398	5.41	2.997	2.159	0.559	530		X	eTU0010
SOIC 300MIL STD	SOIC 300MIL STD TUBE	13.46	7.87	3.56	2.49	0.64	508		X	eTU0335
SRW12ES	SRW12ES TUBE	13	13	15	10	0.6	505		X	eTU0519
SRW16EE	SRW16EE TUBE	24	11.3	20.4	14.5	0.75	480			eTU0427
SRW16ES-03	SRW16ES-03 TUBE	16	16	21.5	16	0.7	477		X	eTU0428
THM1050H-32P	THM1050H-32P TUBE	19.00	19.00	12.60	6.60	0.50	475		X	eTU0691
XA10E4-01	XA10E4-01 TUBE	16.10	11.90	10.40	6.70	0.70	510		X	eTU0598

Copyright © 1999-2023 ePAK International, Inc. All Rights Reserved

TUBE TOOLING

TO-220

Package	ePAK P/N	A	B	C	H	T	L	Pin	Plug	Code
245-0277160	245-0277160 TUBE	22.60	22.60	4.80	3.00	0.80	509		X	eTU0673
245-0277910	245-0277910 TUBE	23.36	23.36	5.96	2.06	0.90	497			eTU0681
245-0277970	245-0277970 TUBE	22.40	22.40	5.60	4.05	0.80	513			eTU0680
2PM0014Z	2PM0014Z TUBE	24.40	24.40	13.40	5.10	0.80	532	X		eTU0788
3CP71911	3CP71911 TUBE	18.700	18.700	2.700	1.400	0.650	480	X		eTU0140
3CP71322	3CP71322 TUBE	31.400	31.400	5.500	3.400	0.750	532		X	eTU0017
3CP90127	3CP90127 tube	32.10	32.10	17.00	5.15	1.00	532	x		eTU0840
3CP90181	3CP90181 TUBE	37.50	21.70	10.00	6.00	0.90	532	X		eTU0816
3CP91325	3CP91325 TUBE	31.40	16.20	5.00	5.00	0.75	532	x		eTU0815
3S-050271-1	3S-050271-1 TUBE	26.40	26.40	5.40	3.40	0.80	710	X		eTU0634
3S-970303-2	3S-970303-2 TUBE	36.900	36.900	6.000	4.200	0.600	640		X	eTU0005
3S-980043-2	D5SB 3S-980043-2 TUBE	32.6	32.6	5.8	3.9	0.7	640	X		eTR0212
OY-MGN	OY-MGN TUBE	30.00	30.00	3.00	1.50	0.70	260			eTU0742
TO220FN	TO220FN ANTISTATIC TUBE	36.000	36.000	5.500	2.700	0.700	550		X	eTU0023
TO220FS	TO220FS TUBE	32.60	17.70	13.90	5.70	0.90	532	X		eTU0804
TO-220	TO-220 TUBE	31.400	31.400	5.500	3.400	0.750	527	X		eTU0142
FM-20L	FM-20L TUBE	28.40	28.40	16.70	4.80	0.80	530		x	eTU0821

 Copyright © 1999-2023 ePAK International, Inc. All Rights Reserved

TUBE TOOLING

RELAY

Package	ePAK P/N	A	B	C	H	T	L	Pin	Plug	Code
PK-0128-04	PK-0128-04 TUBE	25.100	25.100	30.800	25.300	0.700	565		X	eTU0104
PK-0105-04	PK-0105-04 TUBE	10.800	10.800	31.000	25.800	0.600	652		X	eTU0105
PK-0129-03	PK-0129-03 TUBE	22.500	22.500	21.000	16.500	0.600	380		X	eTU0106
PK-0135-03	PK-0135-03 TUBE	29.000	29.000	30.900	25.500	0.700	408		X	eTU0107

IPACK

Package	ePAK P/N	A	B	C	H	T	L	Pin	Plug	Code
I-PACK	3CP71911 TUBE	2.700	2.700	18.700	8.600	0.650	480	X		eTU0140

DPACK

Package	ePAK P/N	A	B	C	H	T	L	Pin	Plug	Code
D-PACK	3CP71288 TUBE	22.500	22.500	6.000	2.900	0.600	532	X		eTU0016
LS-SC-ST-DRW-003(DPACK)	LS-SC-ST-DRW-003 TUBE	8.600		28.000	14.200	0.800	520	X		eTU0089
3CP71889	3CP71889TUBE	32.400	32.400	9.500	5.500	0.750	532	X		eTU0148

Copyright © 1999-2023 ePAK International, Inc. All Rights Reserved

TUBE TOOLING

PLCC

Package	ePAK P/N	A	B	C	H	T	L	Pin	Plug	Code
D000511	D000511 TUBE	1.800	1.800	8.600	8.600	0.700	546	X	X	eTU0097
PLCC	3CP 90128 TUBE	13.300	13.300	4.900	4.900	0.900	532		X	eTU0129
10041857-03-002	10041857-03-002 TUBE	38.60	38.60	25.40	19.50	1.00	610		X	eTU0412
10041857-03-003	10041857-03-003 TUBE	30.20	30.20	17.00	11.10	0.80	610		X	eTU0414
10041857-03-001	10041857-03-001 TUBE	34.40	34.40	20.40	15.40	0.80	610		X	eTU0418
9-912107-2	9-912107-2 TUBE	16.80	16.80	25.00	6.30	0.80	575		X	eTU0432
TU96163	TU96163 TUBE	71.00	71.00	16.00	12.00	1.20	250			eTU0435
CIT12-C1	CIT12-C2 TUBE	16.45	13.95	13.50	13.50	0.63	508		X	eTU0460
67261	67261 TUBE	9.40	6.90	3.80	3.80	0.50	600		X	eTU0461
N02	N02 TUBE	10.90	10.90	1.78	1.78	0.70	615		X	eTU0592
230-0376	230-0376 TUBE	13.34	13.34	9.40	9.40	1.00	260			eTU0646
3322 200 9403	3322 200 9403 TUBE	18.30	18.30	5.30	3.50	0.90	491			eTU0688

TSSOP

Package	ePAK P/N	A	B	C	H	T	L	Pin	Plug	Code
TSSOP 8/14/16	3CP60316 TUBE	6.600	6.600	2.600	1.900	0.600	532		X	eTU0018

Copyright © 1999-2023 ePAK International, Inc. All Rights Reserved

TUBE TOOLING

CRYSTAL

Package	ePAK P/N	A	B	C	H	T	L	Pin	Plug	Code
3S-9410189	3S-9410189 TUBE	13.000	13.000	10.500	3.000	0.500	520		X	eTU0004
950146	950146 TUBE	16.000	16.000	8.700	N/A	6.000	565		X	eTU0006
G5V-2	G5V-2 TUBE	10.500	10.500	13.000	10.000	0.640	530		X	eTU0008
950215	950215 TUBE	5.250	5.250	2.500	N/A	0.500	600		X	eTU0011
03M-000025-1	03M-000025-1 TUBE	42.000	42.000	7.600	5.500	1.200	680		X	eTU0019
950174-001	950174-001 TUBE	5.250	5.250	3.500	N/A	0.500	600		X	eTU0024
10P FPC	10P FPC TUBE	7.900	7.900	9.800	6.800	0.600	600		X	eTU0029
165CGP-003-01	165CGP-003-01 TUBE	10.600	10.600	10.100	6.200	0.800	600		X	eTU0036
HOSONIC	HOSONIC TUBE	11.400	14.500	16.800	9.700	0.600	516		X	eTU0069
301-324-8	301-324-8 TUBE	13.970	13.970	22.733	14.910	0.635	520.7	X		eTU0073
HOSONIC(2)	HOSONIC(2) TUBE	9.000	10.900	12.000	5.800	0.600	518		X	eTU0138
SC003 MA05	SC003 MA05 TUBE	5.600	5.600	33.200	16.200	0.800	520		X	eTU0139
G5V-1	G5V-1 TUBE	8.300	8.300	15.000	10.450	0.500	520		X	eTU0143
G5V-11	G5v-11TUBE	8.300	8.300	15.000	15.000	0.500	640		X	eTU0144
G5V-1F	G5V-1FTUBE	10.300	10.300	13.400	9.400	0.500	520		X	eTU0145
950271	950271 TUBE	5.0	5.0	2.5	0.95	0.5	600		X	eTU0247
99-0221-04	99-0221-04 TUBE	17.00	17.00	8.20	9.40	0.80	414		X	eTU0304
TU01308	TU01308 TUBE	7.80	7.80	8.42	N/A	0.64	584.2			eTU0307
HSJ1637	HSJ1637 TUBE	8.80	8.80	10.00	6.50	0.60	550		X	eTU0336
STICK FOR M5NV	STICK FOR M5NV TUBE	4.80	4.80	5.30	3.75	0.60	600		X	eTU0340

Copyright © 1999-2023 ePAK International, Inc. All Rights Reserved

TUBE TOOLING

CRYSTAL (continued)

99-7-H001-000	99-7-H001-000 TUBE	15.40	15.40	8.20	9.40	0.80	590		X	eTU0342
LD03	LD03 TUBE	5.00	5.00	6.20	N/A	0.60	570		X	eTU0388
SOP375-2	SOP375-2 TUBE	15.20	15.20	4.30	1.50	0.50	520		X	eTU0391
SOP300	SOP300 TUBE	15.20	15.20	4.30	1.20	0.50	520		X	eTU0392
99-7-H011-000	99-7-H011-000 TUBE	18.60	18.60	8.20	5.20	0.80	590		X	eTU0462
99-0181-04	99-0181-04 TUBE	18.60	18.60	8.20	5.20	0.80	414		X	eTU0466
99-0997-01	99-0997-01	9.90	8.50	7.30	4.40	0.60	503			eTU0770
LGA0909-4.0	LGA0909-4.0	9.60	9.60	4.60	4.60	0.50	508&315		X	eTU0783
99-1006-01	99-1006-01	9.90	8.50	7.30	4.00	0.60	503			eTU0789
99-1005-01	99-1005-01	9.90	8.50	7.30	4.40	0.60	503			eTU0790

SWITCH

Package	ePAK P/N	A	B	C	H	T	L	Pin	Plug	Code
KS-10-001	KS-10-001 TUBE	14.300	8.200	12.500	6.500	0.500	500		X	eTU0009
MC-K-0004	MC-K-0004 TUBE	11.800	10.000	9.940	4.440	0.500	500		X	eTU0030
MC-K-0002	MC-K-0002 TUBE	11.200	6.900	4.400	2.700	0.600	500		X	eTU0031
MCK0006	MCK0006 TUBE	12.000	8.500	7.500	5.500	0.500	500		X	eTU0084

DIODE

Package	ePAK P/N	A	B	C	H	T	L	Pin	Plug	Code
CMD-182	CMD-182 TUBE	6.420	6.420	20.310	7.840	0.600	506			eTU0249

Copyright © 1999-2023 ePAK International, Inc. All Rights Reserved

TUBE TOOLING

CONNECTOR

Package	ePAK P/N	A	B	C	H	T	L	Pin	Plug	Code
083-0001-171	083-0001-171 TUBE	100.000	96.500	21.400	18.900	0.800	390		X	eTU0014
6-912078-2	6-912078-2 TUBE	18.900	18.900	15.850	11.450	0.600	508		X	eTU0020
2-912078-1	2-912078-1 TUBE	20.790	20.790	19.600	15.200	0.600	508		X	eTU0021
2-912078-6	2-912078-6 TUBE	45.600	45.600	37.200	29.900	1.000	508		X	eTU0022
7-912052-4	7-912052-4 TUBE	10.350	10.350	28.600	22.600	0.700	500		X	eTU0027
6-912054-9	6-912054-9 TUBE	16.900	16.900	27.900	22.400	0.800	500		X	eTU0028
081-0003-729	081-0003-729 TUBE	153.160	143.090	33.020	13.840	1.270	368		X	eTU0032
083-5001-316	083-5001-316 TUBE	18.400	18.400	17.400	25.000	0.800	605		X	eTU0042
081-0001-945	081-0001-945 TUBE	9.500	9.500	4.800	2.300	0.600	475		X	eTU0043
081-0001-967	081-0001-967 TUBE	6.300	6.300	10.000	7.200	5.000	420		X	eTU0044
081-4000-050	081-4000-050 TUBE	16.200	16.200	23.500	11.550	0.800	605		X	eTU0045
081-5000-050	081-5000-050 TUBE	16.200	16.200	23.500	11.550	0.800	605		X	eTU0046
080-4001-971	080-4001-971 TUBE	16.400	16.400	17.400	17.400	0.800	605		X	eTU0047
083-5001-637	083-5001-637 TUBE	18.400	18.400	11.550	26.700	0.800	610		X	eTU0050
083-0001-728	083-0001-728 TUBE	16.140	16.140	14.600	13.520	0.800	500		X	eTU0051
083-4001-708	083-4001-708 TUBE	16.200	16.200	23.500	15.550	0.800	605		X	eTU0052
080-4002-971	080-4002-971 TUBE	16.400	16.400	35.600	17.400	0.800	605		X	eTU0059
080-5001-971	080-5001-971 TUBE	18.400	18.400	23.100	17.400	0.800	605		X	eTU0060
083-0002-728	083-0002-728 TUBE	33.000	33.000	16.520	13.020	0.800	280		X	eTU0063
083-0001-843	083-0001-843 TUBE	100.000	97.610	16.000	10.380	1.000	390		X	eTU0065
083-5021-816	083-5021-816 TUBE	14.800	14.800	34.300	12.100	0.800	605		X	eTU0070

Copyright © 1999-2023 ePAK International, Inc. All Rights Reserved

TUBE TOOLING

CONNECTOR (Continued)

Package	ePAK P/N	A	B	C	H	T	L	Pin	Plug	Code
083-5001-708	083-5001-708 TUBE	16.200	16.200	23.500	6.600	0.800	605		X	eTU0077
084-3002-069	084-3002-069 TUBE	10.490	10.490	15.670	15.670	0.800	525		X	eTU0085
084-3001-069	084-3001-069 TUBE	10.490	10.490	27.030	27.030	0.800	525		X	eTU0086
080-0002-597	080-0002-597 TUBE	6.500	6.500	5.300	2.300	0.700	480		X	eTU0088
081-0002-967	081-0002-976 TUBE	6.300	6.300	10.000	7.200	0.500	420		X	eTU0120
0-912107-1	0-912107-1TUBE	48.100	48.100	46.700	26.700	1.000	508		X	eTU0146
912107-6	912107-6 TUBE	4.800	4.800	9.000	6.400	0.700	508		X	eTU0189
STA C	STA C TUBE	18.5	18.5	8.4	4.4	0.7	580		X	eTU0213
1-912107-4	1-912107-4 TUBE	27.9	27.9	16.7	10.6	0.8	508		X	eTU0217
LD07	LD07 TUBE	5.1	5.1	6.1	1.4	0.6	570		X	eTU0218
623287-1	623287-1 TUBE	5.8	5.8	7.5	6.0	0.5	508		X	eTU0227
2-912107-8	2-912107-8 TUBE	16.0	16.0	32.4	26.4	0.8	508		X	eTU0238
SSM A	SSM A TUBE	53.0	53.0	19.0	7.6	1.0	522		X	eTU0240
3-912107-1	3-912107-1 TUBE	17.1	17.1	30	13.4	0.9	508		X	eTU0243
3-912107-2	3-912107-2 TUBE	30.2	30.2	19.6	12.5	0.9	508		X	eTU0244
SE A	SE A TUBE	6.4	6.4	29.4	16.6	0.7	440		X	eTU0245
S6207L	S6207L TUBE	32.6	32.6	11	6.7	0.7	550		X	eTU0246
SMA C	SMA C TUBE	10.1	10.1	22.4	11.6	0.7	590		X	eTU0248
SPM A	SPM A TUBE	12.4	12.4	29.8	12.2	0.7	580			eTU0250
3-912107-0	3-912107-0 TUBE	15.9	15.9	31.7	13.8	0.8	540		X	eTU0251

Copyright © 1999-2023 ePAK International, Inc. All Rights Reserved

TUBE TOOLING

CONNECTOR (Continued)

Package	ePAK P/N	A	B	C	H	T	L	Pin	Plug	Code
C5G	C5G TUBE	7.2	7.2	12.5	7.3	0.6	508		X	eTU0252
C5H	C5H TUBE	7.1	7.1	13.5	8.4	0.6	520		X	eTU0253
8-912075-2	8-912075-2 TUBE	30.3	30.3	41.2	20.1	1.0	574		X	eTU0267
MG060-5500	MG060-5500 TUBE	17.5	17.5	14.5	9.5	0.5	550		X	eTU0270
E-67910-001	E-67910-001 TUBE	2.7	5.3	10.6	8.8	0.6	560		X	eTU0271
1447070-6	1447070-6 TUBE	30.5	30.5	42.0	42.0	0.8	700		X	eTU0272
3-1447231-6	3-1447231-6 TUBE	27.0	30.5	37.0	27.5	0.8	700		X	eTU0273
3-1447231-7	3-1447231-7 TUBE	27.0	27.0	29.0	29.0	0.8	700		X	eTU0274
4-912107-5	4-912107-5 TUBE	31.5	31.5	27.3	21.6	0.8	508		X	eTU0278
4-912107-8	4-912107-8 TUBE	23.1	23.1	17.15	11.85	0.7	500			eTU0279
4-912107-9	4-912107-9 TUBE	10.35	10.35	27.9	22.6	0.7	500			eTU0280
4-912107-0	4-912107-0 TUBE	26.9	26.9	22.2	16.9	0.7	500			eTU0281
4-912107-1	4-912107-1 TUBE	15.3	15.3	27.1	22.4	0.8	500			eTU0282
4-912107-2	4-912107-2 TUBE	26.9	26.9	24.8	19.5	0.7	500			eTU0283
4-912107-3	4-912107-3 TUBE	18	18	27.9	22.6	0.7	500			eTU0284
4-912107-4	4-912107-4 TUBE	28.2	28.2	24.8	19.5	0.7	500			eTU0285
4-912107-5	4-912107-5 TUBE	33.0	33.0	32.0	26.8	0.8	508		X	eTU0286
4-912107-6	4-912107-6 TUBE	23.3	23.3	37.4	32.7	0.8	500			eTU0287
4-912107-7	4-912107-7 TUBE	19.2	19.2	27.9	22.6	0.7	500			eTU0288
3S-950057	3S-950057 TUBE	6.400	6.400	46.800	23.000	0.800	660.0			eTU0292
MCK0007	MCK0007 TUBE	12.000	12.000	7.500	3.100	0.600	520.0			eTU0298

Copyright © 1999-2023 ePAK International, Inc. All Rights Reserved

TUBE TOOLING

CONNECTOR (Continued)

Package	ePAK P/N	A	B	C	H	T	L	Pin	Plug	Code
P1-35H	P1-35H TUBE	25.00	20.60	8.70	8.70	0.70	508		X	eTU0291
S600L	S600L TUBE	27.00	23.50	15.10	7.80	0.80	550		X	eTU0293
SPF48	SPF48 TUBE	13.00	13.00	5.00	2.60	0.50	550			eTU0302
2-912107-9	2-912107-9 TUBE	47.60	47.60	35.60	16.50	1.20	508		X	eTU0310
9-912058-3	9-912058-3 TUBE	7.30	7.30	9.85	8.35	0.60	508			eTU0313
9-912058-4	9-912058-4 TUBE	7.30	7.30	9.85	8.35	0.60	508			eTU0314
9-912058-5	9-912058-5 TUBE	7.30	7.30	14.00	12.50	0.60	508			eTU0315
9-912058-6	9-912058-6 TUBE	7.30	7.30	14.00	12.50	0.60	508			eTU0316
6-912107-2	6-912107-2 TUBE	32.90	32.90	21.30	14.80	0.80	500			eTU0317
6-912107-3	6-912107-3 TUBE	13.30	13.30	37.70	32.90	0.80	500			eTU0318
5-912107-8	5-912107-8 TUBE	18.29	18.29	15.85	11.45	0.60	508		X	eTU0319
6-912107-0	6-912107-0 TUBE	20.79	20.79	19.60	15.20	0.60	508		X	eTU0320
230-0878	230-0878 TUBE	15.75	15.75	7.62	4.83	0.80	533.4		X	eTU0325
SRW16ES-V	SRW16ES-V TUBE	20.40	26.80	20.90	5.00	0.70	506			eTU0326
HPC0927	HPC0927 TUBE	9.40	9.40	24.80	N/A	0.70	500			eTU0337
40D89521N	40D89521N TUBE	5.30	5.30	9.50	4.60	0.50	560			eTU0338
SG-9 20A	SG-9 20A TUBE	9.10	9.10	27.80	N/A	0.60	261			eTU0339
6-912107-7	6-912101-7 TUBE	16.70	16.70	21.85	18.80	0.80	575		X	eTU0343
6-912107-9	6-912107-9 TUBE	26.50	26.50	35.50	N/A	1.00	545		X	eTU0348
8-912079-4	8-912079-4 TUBE	28.00	28.00	19.10	16.80	0.70	590		X	eTU0349

Copyright © 1999-2023 ePAK International, Inc. All Rights Reserved

TUBE TOOLING

CONNECTOR (Continued)

Package	ePAK P/N	A	B	C	H	T	L	Pin	Plug	Code
4-912077-5	4-912077-5 TUBE	28.00	28.00	19.10	16.80	0.70	570		X	eTU0350
912059-5	912059-5 TUBE	6.90	6.90	9.85	8.35	0.60	508		X	eTU0351
912059-6	912059-6 TUBE	7.30	7.30	9.85	8.35	0.60	508		X	eTU0352
912059-7	912059-7 TUBE	6.90	6.90	9.85	8.35	0.60	508		X	eTU0353
912059-8	912059-8 TUBE	7.30	7.30	9.85	8.35	0.60	508		X	eTU0354
9-912074-6	9-912074-6 TUBE	13.70	13.70	23.29	18.29	0.70	508		X	eTU0356
7-912107-3	7-912107-3 TUBE	27.00	27.00	14.90	11.90	0.70	508		X	eTU0360
7-912107-4	7-912107-4 TUBE	23.60	23.60	16.00	10.40	0.70	500		X	eTU0361
7-912107-6	7-912107-6 TUBE	20.79	20.79	19.60	15.20	0.60	508		X	eTU0362
48-005	48-005 TUBE	9.00	9.00	10.20	6.90	0.50	600		X	eTU0363
48-004	48-004 TUBE	3.90	3.90	13.00	9.00	0.50	600		X	eTU0364
48-003	48-003 TUBE	7.00	7.00	11.20	N/A	0.50	600		X	eTU0365
48-006	48-006 TUBE	9.00	9.00	11.20	7.20	0.50	600		X	eTU0366
48-007	48-007 TUBE	5.30	5.30	12.80	9.10	0.50	600		X	eTU0367
230-0885	230-0885 TUBE	26.67	20.32	24.76	12.57	1.00	534.4		X	eTU0368
CIT12-C	CIT12-C TUBE	16.45	11.05	13.50	N/A	0.63	508.0		X	eTU0369
2-912107-6	2-912107-6	13.70	13.70	23.29	18.29	0.70	508.0		X	eTU0370
48-009	48-009 TUBE	12.50	12.50	7.40	3.80	0.50	600		X	eTU0372
48-008	48-008 TUBE	12.50	12.50	10.00	6.40	0.50	600		X	eTU0373

 Copyright © 1999-2023 ePAK International, Inc. All Rights Reserved

TUBE TOOLING

CONNECTOR (Continued)

Package	ePAK P/N	A	B	C	H	T	L	Pin	Plug	Code
9-912074-5	9-912074-5 TUBE	9.95	9.95	23.29	18.29	0.70	508		X	eTU0374
48-002	48-002 TUBE	9.00	9.00	9.40	7.80	0.50	600		X	eTU0376
7-912107-7	7-912107-7 TUBE	31.40	27.70	25.50	19.00	0.70	500		X	eTU0381
8-912107-6	8-912107-6 TUBE	58.90	58.90	29.50	21.90	1.10	508			eTU0402
8-912107-2	8-912107-2 TUBE	22.20	22.20	18.00	13.10	0.70	508		X	eTU0403
230-0893	230-0893 TUBE	21.46	21.46	21.34	17.53	0.80	533		X	eTU0408
LD03-1	LD03-1 TUBE	9.00	9.00	8.00	4.50	0.60	570			eTU0423
WINDOW KNOB	WINDOW KNOB TUBE	30.00	30.00	22.20	14.60	1.00	790		X	eTU0424
MIRROR KNOB	MIRROR KNOB TUBE	34.00	34.00	17.50	8.50	1.00	790		X	eTU0425
SELECTOR KNOB	SELECTOR KNOB TUBE	47.60	47.60	16.10	12.50	1.00	790		X	eTU0426
SRW16ES-H	SRW16ES-H TUBE	16.90	16.90	20.30	11.50	0.70	505		X	eTU0434
8-912107-7	8-912107-7 TUBE	25.50	25.50	15.00	7.00	0.70	508		X	eTU0436
PJK-651-1 STICK	PJK-651-1 STICK TUBE	14.50	14.50	9.00	6.00	0.70	625			eTU0437
10042920-03-001	10042920-03-001 TUBE	38.00	38.00	24.50	20.45	1.00	610		X	eTU0438
1446-1YY0056	1446-1YY0056 TUBE	18.50	18.50	19.00	8.40	0.70	762	X		eTU0774
1446-1YY0057	1446-1YY0057 TUBE	20.30	20.30	19.00	8.40	0.70	762	X		eTU0775
1446-1YY0058	1446-1YY0058 TUBE	22.30	22.30	19.00	8.40	0.70	762	X		eTU0776
6-912120-4	6-912120-4	51.40	51.40	42.40	36.40	1.00	508		X	eTU0782

Copyright © 1999-2023 ePAK International, Inc. All Rights Reserved

TUBE TOOLING

CONNECTOR (Continued)

Package	ePAK P/N	A	B	C	H	T	L	Pin	Plug	Code
CSS5012-7R01E	CSS5012-7R01E	8.30	8.30	5.20	4.40	0.60	600		X	eTU0784
95 9300 8071 10 175	95 9300 8071 10 175	18.90	13.85	18.80	15.80	0.70	800		X	eTU0791
95 9300 8071 10 176	95 9300 8071 10 176	30.90	13.85	18.80	15.80	0.70	800		X	eTU0792
5-912120-8	5-912120-8	47.70	47.70	33.00	26.10	1.10	508		X	eTU0793
6-912120-6	6-912120-6	50.00	47.00	13.40	11.40	1.10	508		X	eTU0794
6-912120-8	6-912120-8 TUBE	42.60	42.60	36.40	22.90	1.00	574		X	eTU0795
MOTOR ASS'Y	MOTOR ASS'Y TUBE	R5.1mm				0.60	385		X	eTU0802
42K-004E089	42K-004E089 TUBE	12.30	12.30	27.00	15.20	0.75	610		X	eTU0806
7-912120-3	7-912120-3 TUBE	15.70	15.70	30.40	24.40	0.70	508		X	eTU0817
7-912120-3	7-912120-3 TUBE	30.40	24.40	15.70	15.70	0.70	508		x	eTU0817
1-912143-7	1-912143-7 TUBE	27.00	23.90	16.60	16.60	0.90	575		x	eTU0818
1446-9BB0001-01	1446-9BB0001-01 tube	20.50	20.50	37.50	28.50	0.80	573		x	eTU0823
EHS	EHS tube	19.00	19.00	9.00	7.70	0.60	435		x	eTU0825
MCK0002	MCK0002 tube	10.00	10.00	3.20	1.70	0.60	500		x	eTU0826
FJEXAIO016	FJEXAIO016 TUBE	19.80	19.80	17.10	15.60	0.75	470			eTU0828
CSS5305-1201ESZ	CSS5305-1201ESZ tube	8.10	6.00	4.30	3.30	0.50	600		x	eTU0831
E12	E12 tube	14.60	10.60	21.50	16.40	0.70	505			eTU0849
230-1129	230-1129 TUBE	13.60	10.00	20.80	16.20	0.60	530		x	eTU0850
230-1137	230-1137 tube	11.30	11.30	21.00	16.80	0.65	520		x	eTU0858
B71-2090	B71-2090 tube	11.90	11.40	10.60	7.80	0.60	603			eTU0860
230-1140	230-1140 TUBE	16.25	16.25	18.00	13.30	0.65	500		x	eTU0865

Copyright © 1999-2023 ePAK International, Inc. All Rights Reserved

LOCATIONS

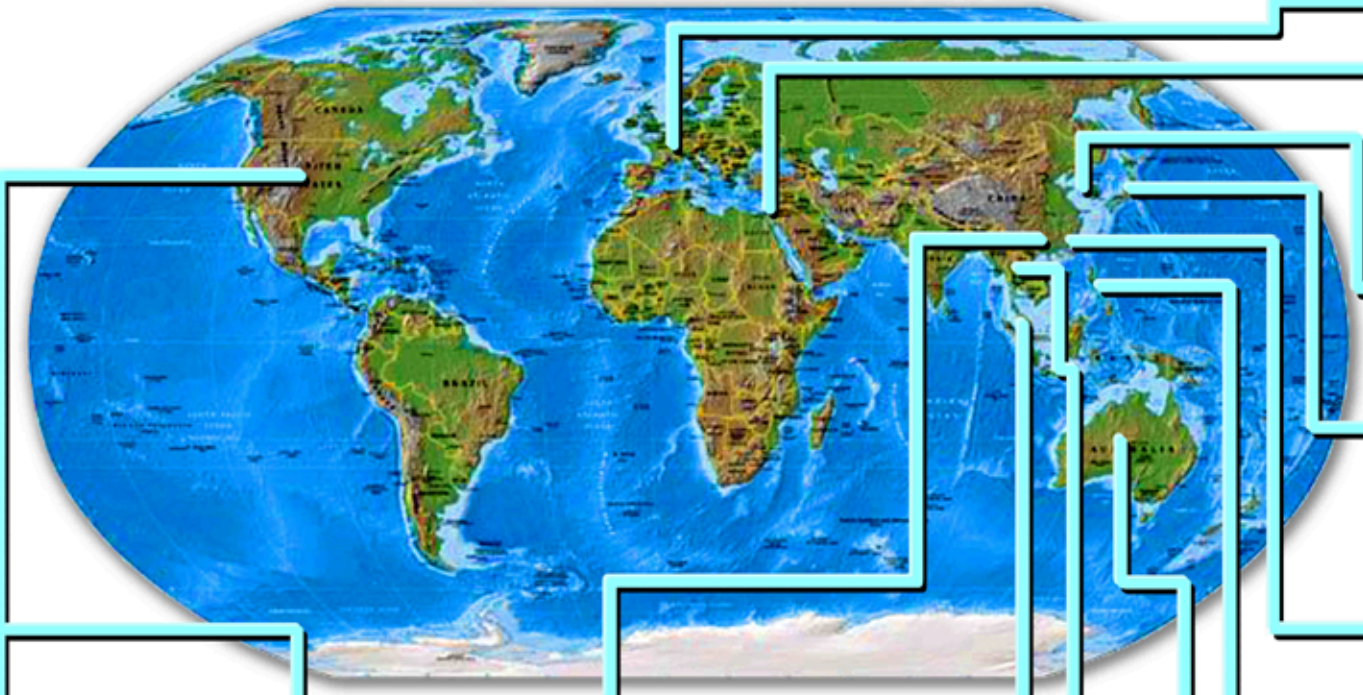

SPS-Europe
Europe
Phone: +31 341 360590
Fax: +31 341 360589

M.Y.G. Tech
Israel
Phone: +972-8 9760620
Fax: +972-8-9760621

ePAK Korea
Seoul, Korea
Phone: +822-401-2627
Fax: +822-401-2618

Kanematsu Kangawa
Japan Head Office:
Phone: (81) 936610360
Fax: (81) 936618552

ePAK Taiwan
Taipei, Taiwan
Phone: +886-2-291-49591
Fax: +886-2-291-49597

ePAK Philippines
Manila, Philippines
Phone: +63-908-815-8322
Land: +63-49-302-5812

MMRC Pty Ltd.
Australia
Phone:+61-3-9885-1752
Fax: +61-3-9885-2603

ePAK International, Inc.
Austin, Texas, U.S.A.
Phone: +1-512-231-8083
Fax: +1-512-231-8183

Redstone Technical
Colorado Springs, CO
U.S.A.
Phone: +1-719-445-8822

ePAK Solutions (SZ) Co.,Ltd.
ePAK Technologies (SZ) Co.,Ltd.
Shenzhen, China
Phone: +86-755-3382-7888
Fax: +86-755-2862-1452

NSI(Thailand) Co., Ltd.
Thailand
Phone: 02-663-3070-2
Fax: 02-663-3073

Jas Pak (S) Pte., Ltd.
Thailand
Phone: +65 6481 0045
Fax: +65 6483 0045

ePAK Resources (S) Pte Ltd.
Singapore
Phone: +65-6846-9908
Fax: +65-6547-4269

Litetronics (S) Pte Ltd.
Singapore
Phone: +65-6842-7889
Fax: +65-6842-7229

Koike (M) Sdn Bhd
Malaysia
Phone: +603-31763923
Fax: +603-31763923

Copyright © 1999-2023 ePAK International, Inc. All Rights Reserved