Tape and Reel IC Shipping Products Catalog

 Copyright © 1999-2024 ePAK International, Inc.

CARRIER TAPE

BGA/CSP

Device Type	Order Code	Style	W	F	P	AO	BO	KO	K1	T	22"	Drawing	Tool
BGA 4x4	eC3-BG0404-12-8-F1-L	F	12	5.50	8	4.35	4.35	1.70	N/A	0.30		eCA0049	a
BGA 4.2X4.4	eC3-BG4.24.4-12-8-F1-L	F	12	5.50	8	4.40	4.60	1.00		0.30		eCA1692	a
BGA 4x4.5	eC3-BGA044.5-12-08-P1-L	P	12	5.50	8	4.40	4.90	1.20	0.54	0.30		eCA1516	a
BGA 4.2X4.4	eC3-BG4.24.4-12-8-F1-L	F	12	5.50	8	4.40	4.60	1.00		0.30		eCA1692	a
BGA 4x5	eC3-BG0405-12-8-F1-L	F	12	5.50	8	4.40	5.40	1.40		0.30		eCA1574	a
BGA 5x5	eC3-BG0505-12-8-F1-L	F	12	5.50	8	5.35	5.35	1.70	N/A	0.30		eCA0048	a
BGA 5x5	eC3-BGA0505-12-08-P1-L	P	12	5.50	8	5.35	5.35	1.50	0.51	0.30		eCA1517	a
BGA 5x5	eC3-BG0505-12-08-P2-L	P	12	5.50	8	5.40	5.40	1.80	1.30	0.30		eCA1526	a
BGA 5x5	eC3-BG0505-12-08-P3-L	P	12	5.50	8	5.35	5.35	1.00		0.30		eCA1567	a
BCC 5X5	eC3-BCC5X5-16-12-P1-L	P	16	7.50	12	5.26	5.26	1.60	1.10	0.30		eCA0452	a
BGA 5X7.5	eC3-BG5X7.5-16-8-F1-L	F	16	7.50	8	5.35	7.85	1.80	1.05	0.30		eCA1051	a
BGA 5.2x6.3	eC3-BG5.26.3-12-8-F1-L	F	12	5.50	8	5.45	6.55	1.00		0.30		eCA1691	a
BGA 5.3x5.3	eC3-BGA5.35.3-12-8-P1-L	P	12	5.50	8	5.65	5.65	1.20	0.60	0.30		eCA1687	a
BGA 5.5x4.5	eC3-BGA5.5x4.5-12-8-P1-L	P	12	5.50	8	4.80	5.80	1.25	0.76	0.30		eCA1535	a
BGA 5.5x5.5	eC3-BG5.55.5-12-8-F1-L	F	12	5.50	8	5.75	5.75	0.72		0.30		eCA1441	a
BGA 5.5x5.5x0.57	eC3-BG5.5X5.5X0.57-12-8-P1-L	P	12	5.50	8	5.85	5.85	1.06	0.42	0.30		eCA1452	a
BGA 6x6	eC3-BG0606-12-8-F1-L	F	12	5.50	8	6.35	6.35	1.70	N/A	0.30		eCA0047	a
BGA 6x6	eC3-BG0606-12-8-P1-L	P	12	5.50	8	6.30	6.30	2.00	1.30	0.30		eCA0143	a
BGA 6x6	eC3-BG0606-12-8-P2-L	P	12	7.50	8	6.30	6.30	2.25	1.25	0.30		eCA1184	a
BGA 6x6	eC3-BG0606-16-12-P3-L	P	16	7.50	12	6.30	6.30	1.65	1.00	0.30		eCA1503	a
BGA 6x6	eC3-BG0606-12-8-P4-L	P	12	5.50	8	6.38	6.38	1.90	0.95	0.30		eCA1508	a

Copyright © 1999-2024 ePAK International, Inc.

CARRIER TAPE

BGA/CSP

Device Type	Order Code	Style	W	F	P	AO	BO	KO	K1	T	22"	Drawing	Tool
TFBGA 6.29X10.53	eC3-TFBGA6.29X10.53-16-12-P1-L	P	16	7.50	12	10.90	6.80	1.60	0.85	0.30		eCA0473	a
BGA 6.5X10	eC3-BG6.5X10-24-8-P1-L	P	24	11.50	8	6.80	10.30	1.70	1.00	0.30		eCA1182	a
BGA 6x8	eC3-BG0608-16-12-F1-L	F	16	7.50	12	6.35	8.35	1.70	N/A	0.30		eCA0051	a
BGA 6x9	eC3-BG0609-16-12-F1-L	F	16	7.50	12	6.35	9.35	1.70	N/A	0.30		eCA0052	a
BGA 6.2x6.2	eC3-BG6.2X6.2-16-12-P1-L	P	16	7.50	12	6.55	6.55	1.63	0.94	0.30		eCA1442	a
BGA 7x7	eC3-BG0707-16-12-P2-L	P	16	7.50	12	7.30	7.30	2.30	1.30	0.30		eCA1183	a
CSP 7x7	eC3-CSP7.X7.0X0.75-16-12-P1-L	P	16	7.50	12	7.30	7.30	1.30	1.15	0.30		eCA0777	a
BGA 7x7	eC3-BG0707-16-12-F1-L	F	16	7.50	12	7.35	7.35	1.70	N/A	0.30		eCA0046	a
BGA 7x7	eC3-BG0707-16-12-P1-L	P	16	7.50	12	7.30	7.30	2.00	1.30	0.30		eCA0142	a
BCC 7X7	eC3-BCC7X7-16-12-P1-L	P	16	7.50	12	7.28	7.28	1.43	0.93	0.30		eCA0453	a
BGA 8x8	eC3-BG0808-16-12-P1-L	P	16	7.50	12	8.30	8.30	2.50	1.50	0.30		eCA0135	a
BGA 8x8	eC3-BG0808-16-12-F1-L	F	16	7.50	12	8.35	8.35	1.70	N/A	0.30		eCA0045	a
BGA 8x8	eC3-BGA0808-16-12-F3-L	F	16	7.50	12	8.30	8.30	1.10		0.30		eCA1528	a
BGA 8x8	eC3-BGA0808-16-12-F4-L	F	16	7.50	12	8.30	8.30	1.10		0.30		eCA1531	a
FPBGA 8x12	eC3-FPBGA8X12-24-12-F1-L	F	24	11.50	12	8.30	12.30	1.60	N/A	0.30		eCA0564	a
BGA 9x9	eC3-BG0909-16-12-F1-L	F	16	7.50	12	9.35	9.35	1.70	N/A	0.30		eCA0044	a
BGA 9x9	eC3-BG0909-16-12-P1-L	P	16	7.50	12	9.35	9.35	2.20	1.20	0.30		eCA0778	a
BGA 9.6x8.6	eC3-BGA9.68.6-24-16-F1-L	F	24	11.50	16	10.00	9.00	1.43		0.30		eCA1696	a
TFBGA 9x14x1	eC3-TFBGA9X14X1-24-12-F1-L	F	24	11.50	12	9.35	14.35	1.50	0.90	0.30		eCA1018	a

Copyright © 1999-2024 ePAK International, Inc.

BGA(continued)

Device Type	Order Code	Style	W	F	P	AO	BO	KO	K1	T	22"	Drawing	Tool
BGA 10x8	eC3-BGA10x8-24-12-P1-L	P	24	11.50	12	8.30	10.30	1.65	1.12	0.30		eCA1536	a
BGA 10x10	eC3-BG1010-24-16-F1-L	F	24	11.50	16	10.35	10.35	1.90	N/A	0.30		eCA0058	a
BGA 10x10	eC3-BG1010-24-12-F1-L	F	24	11.50	12	10.35	10.35	1.90	N/A	0.30		eCA0043	a
FPBGA 10x10	eC3-FPBG1010-24-16-P1-L	P	24	11.50	16	10.40	10.40	2.50	1.50	0.30		eCA0137	a
BGA 10x10	eC3-BG1010-24-16-P1-L	P	24	11.50	16	10.30	10.30	1.70	0.80	0.30		eCA1052	a
BGA 10X12	eC3-BGA10X12-24-12-F1-L	F	24	11.50	12	10.35	12.35	2.00	N/A	0.30		eCA0476	a
BGA 11x11	eC3-BG1111-24-16-F1-L	F	24	11.50	16	11.35	11.35	1.90	N/A	0.30		eCA0042	a
BGA 11x11	eC3-BG11x11-24-16-P1-L	P	24	11.50	16	11.40	11.40	2.00	1.22	0.30		eCA1444	a
BGA 11X11	eC3-BGA1111-24-16-F3-L	F	24	11.50	16	11.30	11.30	1.80	1.10	0.30		eCA1801	a
BGA 11X13.8	eC3-BGA11X13.8-24-16-F1-L	F	24	11.50	16	11.35	14.10	1.85	N/A	0.30		eCA0477	a
BGA 12x12	eC3-BG1212-24-16-P1-L	P	24	11.50	16	12.30	12.30	2.00	1.20	0.30		eCA0136	a
BGA 12x12	eC3-BG1212-24-16-F1-L	F	24	11.50	16	12.35	12.35	1.90	N/A	0.30		eCA0041	a
BGA 12x12	eC3-BGA1212-24-16-P4-L	P	24	11.50	16	12.30	12.30	1.80	1.14	0.30		eCA1518	a
BGA 12x12	eC3-BGA1212-24-16-P5-L	P	24	11.50	16	12.30	12.30	1.50	0.85	0.30		eCA1579	a
BGA 12x12	eC3-BG1212-24-16-P2-L	P	24	11.50	16	12.35	12.35	2.30	N/A	0.30		eCA0188	a
BGA 12.5x12.5	eC3-BGA12.5X12.5-24-16-P2-L	P2	24	11.50	16	12.80	12.80	1.50	0.85	0.30		eCA1728	a
BGA 13x13	eC3-BG1313-24-24-F1-L	F	24	11.50	24	13.35	13.35	1.90	N/A	0.30		eCA0050	a
BGA 1313	eC3-BGA1313-24-16-P1-L	P	24	11.50	16	13.35	13.35	2.30	1.10	0.30		eCA1139	a
BGA 14x14	eC3-BG1414-24-20-F1-L	F	24	11.50	20	14.35	14.35	2.10		0.30		eCA1499	a
BGA 14x14	eC3-BGA1414-24-20-P1-L	P	24	11.50	20	14.30	14.30	2.10	1.25	0.30		eCA1575	a

 Copyright © 1999-2024 ePAK International, Inc.

CARRIER TAPE

BGA(continued)

Device Type	Order Code	Style	W	F	P	AO	BO	KO	K1	T	22"	Drawing	Tool
BGA 15x15	eC3-BG1515-24-20-P1-L	P	24	11.50	20	15.35	15.35	2.00	1.40	0.30		eCA0525	a
BGA 16x16	eC3-BG1616-24-24-P1-L	P	24	11.50	24	16.35	16.35	2.30	1.25	0.30		eCA1555	a
BGA 17x17	eC3-BG1717-24-24-F1-L	F	24	11.50	24	17.35	17.35	2.3	1.2	0.3		eCA0582	a
BGA 17x17	eC3-BG1717-24-24-F2-L	F	24	11.50	24	17.35	17.35	2.10		0.30		eCA1500	a
BGA 18x18	eC3-BG1818-32-24-P1-L	P	32	14.20	24	18.40	18.40	3.70	2.70	0.30		eCA0376	a
BGA 21x21	eC3-BG21X21-32-24-P1-L	P	32	14.20	24	21.40	21.40	2.70	1.60	0.30		eCA0411	a
BGA 21x21	eC3-BG2121-32-28-P2-L	P	32	14.20	28	21.40	21.40	3.20	2.30	0.30		eCA1490	a
BGA 23x23x2.35	eC4-BG2323x2.35-44-28-P1-L	P	44	20.20	28	23.50	23.50	3.10	2.10	0.40		eCA1435	a
BGA 27x27	eC4-BG2727-44-32-P1	P	44	20.20	32	27.40	27.40	2.90	1.90	0.40		eCA0016	a
BGA 27x27	eC3-BG2727-44-32-P1	P	44	20.20	32	27.50	27.50	3.60	1.90	0.30		eCA0025	a
	eC3-1000037805-CTPK016-16-12-F1-L	F	16	7.50	12	6.60	7.40	2.80	N/A	0.30		eCA1412	a
	eC3-1000040592-CTPK012-12-8-F1-L	F	12.00	5.50	8.00	5.30	5.30	2.70		0.30		eCA1460	a
	eC4-1000037494-CTPK056-56-24-F1-L	F	56	26.20	24	15.80	36.30	6.60	N/A	0.40		eCA1366	a
	eC4-1000038199-CTPK001-12-8-F1-L	F	12	5.50	8	4.00	4.30	2.90	N/A	0.40		eCA1415	a
	eC4-1000040802-SM22C87-16-8-F1-L	F	16.00	7.50	8.00	4.10	6.50	4.00		0.40		eCA1469	a
	eC4-1000041047-CTPK012-12-8-F1-L	F	12.00	5.50	8.00	4.80	5.40	3.70		0.30		eCA1475	a
	eC4-99-1002-00-16-12-F1-L	F	16	7.50	12	8.80	9.80	4.30	N/A	0.40		eCA1413	a
	eN3.5-1348-1YY0008-16-4-F1-L	F	16	7.50	4	1.00	7.00	1.90	N/A	0.35		eCA1401	a

Copyright © 1999-2024 ePAK International, Inc.

BGA(continued)

Device Type	Order Code	Style	W	F	P	AO	BO	KO	K1	T	22"	Drawing	Tool
	eN3-99-0912-00-12-8-F1-L	F	12	5.50	8	3.25	3.25	1.50		0.30		eCA1445	a
	eN4-99-0838-00-16-12-F1-L	F	16	7.50	12	7.10	7.80	3.30		0.40		eCA1446	a
	eN4-99-0847-00-24-16-F1-L	F	24.00	11.50	16.00	10.50	12.10	4.30		0.40		eCA1448	a
	eN4-99-0860-00-24-16-F1-L	F	24.00	11.50	16.00	12.90	13.90	5.70		0.40		eCA1449	a
	eN4-99-0871-00-24-16-F1-L	F	24.00	11.50	16.00	11.10	12.00	4.30		0.40		eCA1450	a
	eN4-99-0872-00-24-16-F1-L	F	24.00	11.50	16.00	11.10	12.00	5.70		0.40		eCA1483	a
	eN4-99-0875-00-16-12-F1-L	F	16.00	7.50	12.00	7.00	7.80	2.20		0.40		eCA1480	a
	eN4-99-0877-00-16-12-F1-L	F	16	7.50	12	7.00	7.80	5.30		0.40		eCA1447	a
	eN4-99-0889-00-24-16-F1-L	F	24.00	11.50	16.00	12.30	13.70	5.20		0.40		eCA1451	a
	eN4-99-0891-00-16-12-F1-L	F	16.00	7.50	12.00	8.70	9.40	4.30		0.40		eCA1479	a
	eN4-99-0906-00-24-16-F1-L	F	24.00	11.50	16.00	12.30	13.70	3.70		0.40		eCA1482	a
	eN4-99-0947-00-24-16-F1-L	F	24.00	11.50	16.00	12.30	13.70	4.70		0.40		eCA1481	a
	eN4-99-1008-01-16-12-F1-L	F	16.00	7.50	12.00	8.40	8.40	4.70		0.40		eCA1474	a
	eN4-99-VTH7-02-16-16-F1-L	F	16.00	7.50	16.00	8.00	8.00	7.50		0.40		eCA1493	a
	eN5-99-0729-01-24-16-F1-L	F	24.00	11.50	16.00	12.50	12.50	8.50		0.50		eCA1471	a

 Copyright © 1999-2024 ePAK International, Inc.

CARRIER TAPE

QFN

Device Type	Order Code	Style	W	F	P	AO	BO	KO	K1	T	22"	Drawing	Tool
QFN 2.2x2.4	eC3-QFN2.2X2.4-12-8-F1-L	F	12	5.50	8	2.70	2.50	1.00		0.30		eCA1512	a
QFN 5x5	eC3-QFN5x5-12-8-F1-L	F	12	5.50	8	5.35	5.30	1.10		0.30		eCA1777	a
QFN 8x7	eC3-QFN8X7-16-12-P1-L	P	16	7.50	12	7.30	8.30	1.40	1.20	0.30		eCA1561	a
QFN 11.5x11.5	eC3-QFN11.5x11.5-24-16-P1-L	P	24	11.50	16	11.80	11.80	1.60	1.00	0.30		eCA1570	a

LGA

Device Type	Order Code	Style	W	F	P	AO	BO	KO	K1	T	22"	Drawing	Tool
LGA 5x5	eC3-LGA0505-12-8-F2-L	F	12	5.50	8	5.35	5.35	1.30		0.30		eCA1436	a
LGA 6X7	eC3-LGA6X7-16-8-F1-L	F	16	7.50	8	6.39	7.39	1.90		0.30		eCA1037	a
LGA 6x7	eC3-LGA6X7-16-8-F2-L	F2	16	7.50	8	6.39	7.39	1.25		0.30		eCA1458	a
LGA 8.3x8.3	eC3-LGA8.38.3-16-12-F1-L	F	16	7.5	12	8.7	8.7	2.5	N/A	0.3		eCA0510	a
LGA 9x9	eC3-LGA0909-24-12-F1-L	F	24	11.5	12	9.35	9.35	1.7	N/A	0.3		eCA0516	a

PLCC

Device Type	Order Code	Style	W	F	P	AO	BO	KO	K1	T	22"	Drawing	Tool
PLCC 20	eC4-PLCC20-16-12-F1-L	F	16	7.50	12	10.30	10.30	4.90	N/A	0.40		eCA0072	a
PLCC 32	eC3-PLCC32-24-16-P1-L	P	24	11.50	16	12.90	15.50	3.90	3.60	0.30		eCA0071	a
PLCC 32	eC3-PLCC32-24-16-F1-L	F	24	11.50	16	13.10	15.50	3.90	N/A	0.30		eCA0161	a
PLCC HEP	eC3-HEP7LD-44-24-F1-L	F	44	20.20	24	10.80	22.90	5.20	N/A	0.30		eCA0160	a
PLCC 44	eC4-PLCC44-32-24-P1-L	P	32	14.20	24	18.00	18.00	5.70	5.50	0.40		eCA0262	a
PLCC 68	eC4-68PLCC-44-32-P1-L	P	44	20.20	32	25.60	25.60	5.20	4.10	0.40		eCA0509	a
PLCC 28	eC3-28PLCC-24-16-P1-L	P	24	11.50	16	13.00	13.00	4.75	3.85	0.30		eCA0526	a

Copyright © 1999-2024 ePAK International, Inc.

CARRIER TAPE

SOIC

Device Type	Order Code	Style	W	F	P	AO	BO	KO	K1	T	22"	Drawing	Tool
SOIC 8	eC3-S08N-12-8-F1-L	F	12	5.50	8	6.40	5.20	2.10	N/A	0.30		eCA0040	a
SOIC 8	eC3-SOIC08-12-8-P1	P	12	5.50	8	6.90	5.40	2.10	1.85	0.30		eCA0012	a
SOIC 8	eC3-SOIC08-12-8-P2-L	P	12	5.50	8	6.50	5.40	2.00	1.70	0.30		eCA0027	a
SOIC 8	eC3-SOIC8-12-8-F2-L	F	12	5.50	8	6.50	5.50	2.10	N/A	0.30		eCA0187	a
SOIC 8	eC3-SOIC8L-12-8-P1	P	12	5.50	8	6.50	5.30	2.20	1.90	0.30		eCA0011	a
SOIC 8	eC3-SOIC8P-12-8-P3-L	P	12	5.50	8	6.20	5.20	2.10	1.70	0.30		eCA0184	a
SOIC 8	eC3-SOIC08W-16-12-P4-L	P	16	7.50	12	8.30	5.70	2.30	2.00	0.30		eCA1261	a
SOIC 8	eC3-SOIC08(150mil)-12-8-F1-L	F	12	5.50	8	6.40	5.20	2.10		0.30		eCA1288	a
SOIC 14	eC3-SO-14P-B-16-8-P1-L	P	16	7.50	8	6.50	9.50	2.30	1.80	0.30		eCA0301	a
SOIC 14/16	eC3-SOIC14/16N-16-8-F1-L	F	16	7.50	8	6.50	9.00	2.10	N/A	0.30		eCA0139	a
SOIC 16	eC3-SO-16P-B-16-8-P1-L	P	16	7.50	8	6.50	10.30	2.30	1.80	0.30		eCA0300	a
SOIC 16	eC3-SOIC16-16-12-F1-L	F	16	7.50	12	10.90	10.70	3.00		0.30		eCA1248	a
SOIC 16	eC3-SO16LP-A-16-12-P1-L	P	16	7.50	12	10.90	10.70	3.20	2.70	0.30		eCA0302	a
SOIC 20	eC3-SOIC20-24-12-P1-L	P	24	11.50	12	10.80	12.96	2.65	N/A	0.30		eCA0138	a
SOIC 20	eC3-SOIC20-24-12-P2-L	P	24	11.50	12	10.75	13.40	3.20	2.60	0.30		eCA0183	a
SOIC 24	eC3-SOIC24 300 MIL-24-16-P1-L	P	24	11.50	16	10.80	15.80	3.10	2.60	0.30		eCA1351	a
SOIC 28	eC3-SOIC28-24-12-P1-L	P	34	11.50	12	10.80	18.30	3.10	2.80	0.30		eCA0839	a
SOIC 32	eC3-SOIC32-32-16-F1-L	F	32	14.20	16	10.90	21.20	3.10		0.30		eCA1247	a

Copyright © 1999-2024 ePAK International, Inc.

CARRIER TAPE

SSOP/TSOP/SOP

Device Type	Order Code	Style	W	F	P	AO	BO	KO	K1	T	22"	Drawing	Tool
C202	eC3-C202-103-16-8-P1-L	P	16	7.50	8	6.90	3.40	1.60	1.20	0.30		eCA0487	a
SOP-24	eC3-SOP24-24-12-F1-L	F	24.00	11.50	12.00	10.90	16.00	3.00		0.30		eCA1410	a
QSOP-20	eC3-QSOP20-16-12-P1-L	P	16	7.50	12	6.50	9.00	2.50	2.00	0.30		eCA1174	a
MSOP-08	eC3-MSOP08-12-8-F1-L	F	12	5.50	8	5.30	3.40	1.40	N/A	0.30		eCA0235	a
SSOP-16	eC3-SSOP16L-16-12-P1-L	P	16	7.50	12	8.60	6.70	2.30	2.00	0.30		eCA0345	a
SSOP-20	eC3-SSOP20-16-12-P2-L	P	16	7.50	12	8.40	7.60	2.60	2.10	0.30		eCA0838	a
SSOP-20	eC3.5-SSOP20-16-12-P3-L	P	16.00	7.50	12.00	8.40	7.56	2.53	1.93	0.35		eCA1054	a
SSOP-24	eC3-SSOP24-16-12-P1-L	P	16	7.50	12	8.30	8.70	2.40	2.10	0.30		eCA0771	a
SSOP-28	eC3-SSOP28-24-12-P1-L	P	24	11.50	12	8.80	10.60	2.50	2.00	0.30		eCA0377	a
SSOP-48	eC3-SSOP48-32-16-P1-L	P	32	14.20	16	11.20	16.30	3.10	2.60	0.30		eCA0166	a
SSOP-48(DP)	eC3-SSOP-48(DP)-24-12-P1-L	P	24	11.50	12	8.60	15.80	1.80	1.30	0.30		eCA0035	a
SSOP-56	eC3-SSOP56-32-16-P1-L	P	32	14.20	16	11.20	18.90	3.10	2.60	0.30		eCA0167	a
TSOP-28	eC3-TSOP28-16-12-P1-L	P	16	7.50	12	6.80	10.10	1.80	1.35	0.30		eCA0227	a
TSOP-40	eC3-TSOP40-32-16-P1-L	P	32	14.20	16	10.30	20.20	1.70	1.10	0.30		eCA0146	a
TSOP-44	eC3-TSOP44P-32-16-P1-L	P	32	14.20	16	12.20	19.10	1.65	N/A	0.30		eCA0232	a
TSOP-44	eC3-TSOP44P-32-16-P1-L	P	32	14.20	16	12.20	19.10	1.65	N/A	0.30		eCA0232	a
TSOP-48	eC3-TSOP48-32-16-P1-L	P	32	14.20	16	12.30	20.25	1.70	1.20	0.30		eCA0159	a
TSOP-54	eC3-TSOP54-44-16-P1-L	P	44	20.2	16	12.2	22.8	1.7	1.35	0.3		eCA0619	a

Copyright © 1999-2024 ePAK International, Inc.

CARRIER TAPE

TSSOP

Device Type	Order Code	Style	W	F	P	AO	BO	KO	K1	T	22"	Drawing	Tool
TSSOP-8(PW)	eC3-TSSOP-8(PW)-16-8-P1-L	P	24	11.50	12	6.60	16.50	3.80	N/A	0.40		eCA0073	a
TSSOP-14/16	eC3-TSSOP14/16-16-12-PI-L	P	16	7.50	12	7.40	5.40	1.60	1.05	0.30		eCA0378	a
TSSOP-14/16	eC3-TSSOP14/16-16-8-P2-L	P	16	7.50	8	6.80	5.40	1.80	1.30	0.30		eCA0767	a
TSSOP-20	eC3-TSSOP20-16-12-P1-L	P	16	7.50	12	6.90	7.10	1.85	1.35	0.30		eCA0185	a
TSSOP20	eC3-TSSOP20-16-8-P3-L	P	16	7.50	8	6.80	7.00	1.60	1.10	0.30		eCA0958	a
TSSOP-20	eC3-TSSOP20-16-8-P2-L	P	16	7.50	8	6.80	7.10	1.85	1.35	0.30		eCA0765	a
TSSOP-20	eC3-TSSOP20-12-8-P1-L	P	12	5.50	8	6.80	7.00	1.60	1.20	0.30		eCA0506	a
TSSOP-24	eC3-TSSOP24-16-8-P1-L	P	16	7.50	8	6.95	8.30	1.60	1.20	0.30		eCA0217	a
TSSOP-28	eC3-TSSOP28-16-12-P1-L	P	16	7.50	12	6.80	10.10	1.80	1.35	0.30		eCA0227	a
TSSOP-28	eC3-TSSOP28-16-8-P2-L	P	16	7.50	8	6.80	10.10	1.80	1.30	0.30		eCA0766	a
TSSOP-28	eC3-TSSOP28-16-12-P3-L	P	16	7.50	12	8.60	10.20	1.80	1.30	0.30		eCA1425	a
TSSOP-48	eC3-TSSOP48L-24-12-P1-L	P	24	11.50	12	8.85	12.90	1.50	1.30	0.30		eCA1765	a
TSSOP-56	eC3-TSSOP56L-24-12-P1-L	P	24	11.50	12	8.85	14.60	1.50	1.30	0.30		eCA1764	a
TSSOP-64/80	eC3-TSSOP64/80L-24-12-P1-L	P	24	11.50	12	8.85	17.45	1.50	1.30	0.30		eCA1759	a

Copyright © 1999-2024 ePAK International, Inc.

CARRIER TAPE

MQFP/TQFP/LQFP

Device Type	Order Code	Style	W	F	P	AO	BO	KO	K1	T	22"	Drawing	Tool
LQFP 7x7	eC3-LQFP07007x1.4-16-12-P1-L	P	16	7.50	12	9.80	9.80	2.00	1.70	0.30		eCA0018	a
LQFP 7X7	eC3-LQFP-7X7X1.4-16-12-P2-L	P	16	7.50	12	9.27	9.27	2.15	1.55	0.30		eCA0432	a
LQFP 7x7	eC3-LQFP-7X7X1.4-16-12-P3-L	P	16	7.50	12	9.40	9.40	2.15	1.55	0.30		eCA0769	a
LQFP 10x10	eC3-LQFP1010x1.4-24-16-P1-L	P	24	11.50	16	13.00	13.00	2.00	1.70	0.30		eCA0017	a
MQFP 10x10	eC3-MQFP1010X2.0-24-20-P1-L	P	24	11.50	20	14.50	14.50	3.20	2.20	0.30		eCA1433	a
LQFP 12x12	eC3-LQFP1212X1.4-24-20-P1-L	P	24	11.50	20	17.50	15.50	2.30	N/A	0.30		eCA0194	a
TQFP 14x14	eC3-TQFP1414x1.0-24-20-P1-L	P	24	11.50	20	16.60	16.60	1.70	1.20	0.30		eCA1408	a
TQFP 14x14	eC3-TQFP1414X1.0-32-24-P2-L	P	32	14.20	24	16.60	16.60	1.70	1.20	0.30		eCA1562	a
TQFP 14x14	eC3-TQFP1414X1.0-32-24-P3-L	P3	32	14.20	24	17.20	17.20	1.60	1.10	0.30		eCA1695	a
LQFP 14x14	eC3-LQFP1414X1.4-24-20-P1-L	P	24	11.50	20	17.20	17.20	2.00	1.50	0.30		eCA0193	a
QFP 14x14	eC3.5-QFP1414X2.2-32-24-P3-L	P	32	14.20	24	17.70	17.70	3.00	2.20	0.35		eCA1190	a
MQFP 14x20	eC4-MQFP1420x2.7-44-24-P2-L	P	44	20.20	24	19.30	25.30	3.90	2.70	0.40		eCA0228	a
PQFP 14x20	eC3-PQFP1420X2.0-44-24-P1-L	P	44	20.20	24	19.30	25.30	3.25	2.00	0.30		eCA0485	a
LQFP 14x20	eC3-LQFP1420X1.4-44-24-P1-L	P	44	20.20	24	19.00	25.00	2.50	1.40	0.30		eCA0511	a
LQFP 20x20	eC3-LQFP 20x20x1.4-44-32-P2-L	P	44	20.20	32	22.63	22.63	2.20	1.70	0.30		eCA1407	a
LQFP 24x24	EC3-LQFP24X24X1.4-44-32-P1-L	P	44	20.20	32	27.50	27.50	2.00	1.70	0.30		eCA1470	a

Copyright © 1999-2024 ePAK International, Inc.

CARRIER TAPE

CRYSTAL

Device Type	Order Code	Style	W	F	P	AO	BO	KO	K1	T	22"	Drawing	Tool
Crystal	eN3-NO-2886-16-4-P1-L	P	16	7.50	4	2.20	8.20	1.80	1.75	0.30		eCA0032	a
Crystal	eC4-MS3H12/15-24-12-F1-L	F	24	11.50	12	5.00	15.00	4.35	N/A	0.40		eCA0059	a
Crystal	eN4-HCJ-S-9075-24-8-FI-L	F	24	11.50	8	5.00	15.00	4.35	N/A	0.40		eCA0062	a
Crystal	eN4-MS2H-24-8-F1-L	F	24	11.50	8	5.00	14.70	3.50	N/A	0.40		eCA0173	a
Crystal	eC4-7X7-16-12-F1-L	F	16	7.50	12	7.30	7.30	3.90	N/A	0.40		eCA0753	a

SOT

Device Type	Order Code	Style	W	F	P	AO	BO	KO	K1	T	22"	Drawing	Tool
SOT23	eC2-SOT23-8-4-F1-L	F	8	3.50	4	3.15	3.20	1.40	N/A	0.20		eCA0028	a
SOT23	eN2-SOT23-8-4-F1-L	F	8	3.50	4	3.15	3.20	1.40	N/A	0.20		eCA0088	a
SOT559	eC3-SOT559-24-16-F1-L	F	24	11.50	16	11.40	14.15	2.00	N/A	0.30		eCA0170	a
SOT89	eC4-SOT89-12-8-F1-L	F	12	5.50	8	4.80	4.80	1.80	N/A	0.40		eCA0426	a

Copyright © 1999-2024 ePAK International, Inc.

CARRIER TAPE

CONNECTOR

Device Type	Order Code	Style	W	F	P	AO	BO	KO	K1	T	22"	Drawing	Tool
Connector	eN4-161CGP-008-05-16-12-F1	F	16	7.5	12	6.6	9.16	6.1	N/A	0		eCA0006	a
Connector	eN4-161CGP-008-06-16-12-F1	F	16	7.5	12	6.6	10.7	6.1	N/A	0		eCA0008	a
Connector	eN4-161CGP-009-02-16-12-F1	F	16	7.5	12	6.6	4.66	6.1	N/A	0		eCA0009	a
Connector	eN4-161CGP-009-07-24-12-F1	F	24	12	12	8.35	12.2	6.1	N/A	0		eCA0010	a
Connector	eN4-161CGP-008-15-44-12-F1	F	44	20	12	6.6	24.2	6.1	N/A	0		eCA0026	a
Connector	eN3-NO-2886-16-4-P1	P	16	7.5	4	2.2	8.2	1.8	1.75	0		eCA0032	a
Connector	eN4-2-912079-0-24-8-P1	P	24	12	8	4.35	9.25	5.3	3.7	0		eCA0033	a
Connector	eC5-5-912079-1-44-24-P1-L	P	44	20	24	8.3	30.3	10	N/A	1		eCA0057	a
Connector	eN4-SP-72A-16-8-F1-L	P	16	7.5	8	3.9	8.7	2.7	N/A	0		eCA0070	a
Connector	eN4-0-912093-1-24-12-P1-L	P	24	12	12	6.6	16.5	3.8	N/A	0		eCA0073	a
Connector	eN4-9-912067-4-32-12-P1-L	P	32	14	12	6.5	19	6.7	5.75	0		eCA0075	a
Connector	eN4-0-912067-7-32-12-P1-L	P	32	14	12	6.5	19	4.5	3.55	0		eCA0076	a
Connector	eN4-1-9-912077-9-72-24-P1-L	P	72	34	24	13.7	49	4.2	N/A	0		eCA0096	a
Connector	eN4-2-912078-9-12-P1-L	P	72	34	12	6.1	50.8	5.4	N/A	0		eCA0098	a
Connector	eN4-0-912093-7-24-12-P1-L	P	24	12	12	6.6	16.5	4.3	N/A	0		eCA0099	a
Connector	eN4-0-912094-1-32-12-P1-L	P	32	14	12	6.6	16.5	8.6	N/A	0		eCA0125	a
Connector	eN4-0-912093-6-24-12-P1-L	P	24	12	12	6.6	14.1	14	N/A	0		eCA0126	a
Connector	eC4-6-912079-8-56-48-P1-L	P	56	26	48	43.8	36.3	5.1	N/A	0		eCA0130	a
Connector	eN4-0-912094-2-32-12-P1-L	P	32	14	12	6.6	17.3	2.6	N/A	0		eCA0140	a
Connector	eN4-0-912095-3-44-12-P1-L	P	44	20	12	6.6	29.8	2.6	N/A	0		eCA0141	a
Connector	eN5-9-912058-8-32-12-P1-L	P	32	14	12	5.9	20.5	5.5	4.25	1		eCA0148	a
Connector	eN5-1-720999-5-16-8-P1-L	P	16	7.5	8	4.7	8	5	3.8	1		eCA0152	a
Connector	eN3-SP-T3A-16-8-F1-L	F	16	7.5	8	4.5	7.8	2.2	N/A	0		eCA0158	a
Connector	eN4-9-912068-4-16-12-P1-L	P	16	7.5	12	4.3	9.8	2	1.4	0		eCA0163	a

Copyright © 1999-2024 ePAK International, Inc.

CARRIER TAPE

CONNECTOR(continued)

Device Type	Order Code	Style	W	F	P	AO	BO	KO	K1	T	22"	Drawing	Tool
Connector	eN4-161CGP-008-11-24-12-F1-L	F	24	12	12	6.6	18.2	6.1	N/A	0		eCA0205	a
Connector	eN4-161CGP-008-12-32-12-F1-L	F	32	14	12	6.6	19.7	6.1	N/A	0		eCA0206	a
Connector	eN4-7-912075-1-24-12-P1-L	P	24	12	12	5.9	14.3	5.8	N/A	0		eCA0207	a
Connector	eN5-7-912055-9-24-12-P1-L	P	24	12	12	5.9	18	7.5	N/A	1		eCA0218	a
Connector	eN5-6-912055-2-24-12-P1-L	P	24	12	12	6	16.8	7.3	N/A	1		eCA0219	a
Connector	eN4-912094-3-32-12-P1-L	P	32	14	12	6.8	16.5	6.7	N/A	0		eCA0221	a
Connector	eC4-0-912096-3-56-52-P1-L	P	56	26	52	43.8	36.3	5.1	N/A	0		eCA0222	a
Connector	eN4-7-912061-0-44-12-P1-L	P	44	20	12	5.4	29.1	4.3	3.5	0		eCA0242	a
Connector	eN4-7-912061-1-44-12-P1-L	P	44	20	12	5.6	29.1	4.4	3.6	0		eCA0243	a
Connector	eN5-1-720999-4-16-8-P1-L	P	16	7.5	8	4.7	6.75	3.8	N/A	1		eCA0250	a
Connector	eC5-639423-1-16-8-P1-L	P	16	7.5	8	5.6	5.6	4.4	2.9	1		eCA0421	a
Connector	eC4-76190-16-8-P1-L	P	16	7.5	8	5.5	8.5	4.6	3.8	0		eCA0448	a
Connector	eN3-SPF-24A-24-16-F1-L	F	24	12	16	11.1	17.8	2.9	N/A	0		eCA0471	a
Connector	eC4-1-912092-2-16-8-P1-L	P	16	7.5	8	3.3	7.3	4.4	1.85	0		eCA0475	a
Connector	eN5-5-0912110-4-104-32-P1-L	P	#	50	32	13	83	8.6	6.8	1		eCA0478	a
Connector	eN5-1-0097196-6-88-16-P1-L	P	88	42	16	7.1	70.1	13	12.2	1		eCA0479	a
Connector	eC5-AJ352-9-24-20-P1-L	P	24	12	20	10.3	12.3	11	8.45	1		eCA0480	a
Connector	eC4-TPP1002-56-16-F1-L	F	56	26	16	11.5	45.6	4.8	N/A	0		eCA0481	a
Connector	eC5-887-9620-74-24-16-P1-L	P	24	12	16	10.2	9.43	5.6	4.3	1		eCA0491	a

Copyright © 1999-2024 ePAK International, Inc.

CONNECTOR(continued)

Device Type	Order Code	Style	W	F	P	AO	BO	KO	K1	T	22"	Drawing	Tool
Connector	eN5-2-912093-1-32-12-P1-L	P	32	14	12	5.8	10.5	7	6	1		eCA0505	a
Connector	eN4-NORTEK-24-12-P1-L	P	24	12	12	7.3	13.8	4.7	3.5	0		eCA0507	a
Connector	eN5-0-0097195-4-88-16-P1-L	P	88	42	16	8.5	70.1	9.3	8.25	1		eCA0515	a
Connector	eC4-3PIN-16-12-F1-L	F	16	7.5	12	8.6	8.8	5.1	N/A	0		eCA0518	a
Connector	eC4-2PIN-16-12-F1-L	F	16	7.5	12	8.6	6.2	5.1	N/A	0		eCA0519	a
Connector	eC4-4PIN-24-12-F1-L	F	24	12	12	8.6	11.2	5.1	N/A	0		eCA0520	a
Connector	eC4-427/8/9-24-12-P1-L	P	24	12	12	8.1	13.3	4.9	3.9	0		eCA0522	a
Connector	eC5-639423-1-16-8-P2-L	P	16	7.5	8	5.6	5.6	4.4	N/A	1		eCA0524	a
Connector	eN5-2-912093-6-24-12-P1-L	P	24	12	12	4.4	12.8	7.4	6.6	1		eCA0538	a
Connector	eN5-0-912096-9-56-28-P1-L	P	56	26	28	23.9	33.2	5	4.7	1		eCA0539	a
Connector	eN3-2-912093-0-24-8-F1-L	F	24	12	8	5.3	11.1	3.4	N/A	0		eCA0540	a
Connector	eN4-DMS2350CJ01-44-28-P1-L	P	44	20.2	28	23.4	31.8	10	9	0.40		eCA0562	a
Connector	eC3-1-912092-7-16-8-F1-L	F	16	7.5	8	4.95	7.9	1.2	N/A	0		eCA0584	a
Connector	eC3-1-912092-8-16-8-F1-L	F	16	7.5	8	2.91	6.4	1.1	N/A	0		eCA0585	a
Connector	eC3-2-912093-7-24-8-F1-L	F	24	12	8	4.95	15.9	1.2	N/A	0		eCA0586	a
Connector	eC3-2-912093-9-24-8-F1-L	F	24	12	8	2.91	14.4	1.1	N/A	0		eCA0588	a
Connector	eN4-LVC-B20SFYGTP-24-8-P1-L	P	24	12	8	5.8	16.6	4	3	0		eCA0591	a
1533250-2	eC4-1000017249Rev.--12-8-F1-L	F	12	5.50	8	4.11	4.44	3.54	N/A	0.40		eCA0595	a

 Copyright © 1999-2024 ePAK International, Inc.

CONNECTOR(continued)

Device Type	Order Code	Style	W	F	P	AO	BO	KO	K1	T	22"	Drawing	Tool
Connector	eC4-6.1x5.5-12-8-F1-L	F	12	5.5	8	5.5	6.1	4	N/A	0		eCA0604	a
Connector	eC3-3-912093-3-24-8-F1-L	F	24	12	8	2.91	10.4	1.6	N/A	0		eCA0605	a
Connector	eC3-3-912093-4-24-8-F1-L	F	24	12	8	4.95	10.4	1.8	N/A	0		eCA0606	a
Connector	eN4-6AF6K4NNET020-24-16-F1-L	F	24	12	16	10.3	13.7	3.9	N/A	0		eCA0609	a
Connector	eC4-1000017417-16-12-F1-L	F	16	7.5	12	7.03	7.91	4.6	N/A	0		eCA0611	a
Connector	eC5-1000017540-44-20-F1-L	F	44	20.2	20.	13.6	27.3	9.6	N/A	0.5		eCA0612	a
Connector	eN5-1-912096-1-56-24-P1-L	P	56	26	24	15.5	41.5	8.8	5.8	1		eCA0622	a
Connector	eC4-230-0670-24-12-P1-L	P	24	12	12	9.9	13.1	2.7	2.2	0		eCA0623	a
Connector	eC5-TP-K-0055-24-16-F1-L	F	24	12	16	13.3	7	9.5	N/A	1		eCA0624	a
Connector	eN4-3-0912093-9-24-12-P1-L	P	24	12	12	9	14.5	4.5	3.7	0		eCA0625	a
Connector	eC3-SPF-48A-24-16-P1-L	P	24	11.5	16	11.1	17.8	2.9	2.2	0.3		eCA0626	a
Connector	eC3-TE-1612A-16-12-P1-L	P	16	7.5	12	8.1	8.2	1.9	1.6	0		eCA0628	a
Connector	eC3-TE-1612B-16-12-P1-L	P	16	7.5	12	8.1	10.1	1.9	1.6	0		eCA0629	a
Connector	eC5-1000017876-56-20-F1-L	F	56	26.2	20	14.3	40.3	9.9	N/A	0.5		eCA0631	a
Connector	eN4-ZC-270-12-8-F1-L	F	12	5.5	8	5.9	5.9	3.5	N/A	0		eCA0635	a
Connector	eC2-DS1077-8-4-F1-L	F	8	3.5	4	1.78	2.27	0.84	N/A	0.2		eCA0636	a
Connector	eC3-4-912093-1-24-8-P1-L	P	24	12	8	3.8	11.2	1.8	1.3	0		eCA0638	a
Connector	eN4-1-912094-8-32-12-P1-L	P	32	14.2	12	6.63	17	4.95	3.75	0.4		eCA0642	a
Connector	eN3-95JD-16-8-F1-L	F	16	7.5	8	5.7	9.1	1.9	N/A	0.3		eCA0643	a
Connector	eN4-7-912073-1-88-32-P1-L	P1	88	42.2	32	27	72.3	7.4	6.2	0.4		eCA0645	a
Connector	eN4-PT-1640-SK02-T1-16-8-F1-L	F	16	7.5	8	4.15	10.5	3.7	N/A	0.4		eCA0647	a

 Copyright © 1999-2024 ePAK International, Inc.

CARRIER TAPE

CONNECTOR(continued)

Device Type	Order Code	Style	W	F	P	AO	BO	KO	K1	T	22"	Drawing	Tool
Connector	eC4-0-1332004-1-44-24-P1-L	P	44	20.2	24	19.4	23	7.5	N/A	0.4		eCA0653	a
Connector	eC3-1-912091-4-12-8-F1-L	F	12	5.5	8	4.95	5.9	1.2	N/A	0.3		eCA0654	a
Connector	eC3-1-912091-5-12-8-F1-L	F	12	5.5	8	2.91	4.4	1.13	N/A	0.3		eCA0655	a
Connector	eC3-2-912092-6-16-8-F1-L	F	16	7.5	8	4.95	8.7	1.2	N/A	0.3		eCA0656	a
Connector	eC3-2-912092-7-16-8-F1-L	F	16	7.50	8	2.91	7.20	1.13	N/A	0.30		eCA0657	a
Connector	eC3-4-912093-4-24-8-F1-L	F	24	11.50	8	4.95	13.90	1.20	N/A	0.30		eCA0658	a
Connector	eC3-4-912093-5-24-8-F1-L	F	24	11.50	8	2.91	12.40	1.13	N/A	0.30		eCA0659	a
Connector	eC3-2-912094-0-32-8-F1-L	F	32	14.20	8	2.91	18.40	1.13	N/A	0.30		eCA0660	a
Connector	eC3-1-912094-9-32-8-F1-L	F	32	14.20	8	4.95	19.90	1.20	N/A	0.30		eCA0661	a
Connector	eN3-TDF1575U07T-12-8-F1-L	F	12	5.50	8	5.70	5.30	2.50	N/A	0.30		eCA0662	a
Connector	eN3-ML-414R4/F9F-16-8-P1-L	P	16	7.50	8	4.90	10	2.60	2	0.30		eCA0666	a
Connector	eN5-9-0912057-5-56-12-P1-L	P	56	26.20	12	8.70	38.10	9.40	8.40	0.50		eCA0667	a
Connector	eN4-5444396-4E1(H40)-44-12-F1-L	F	44	20.20	12	8	25.20	3.70	N/A	0.40		eCA0668	a
Connector	eN5-BD3002-003-24-16-F1-L	F	24	11.50	16	10.20	9.40	5.50	N/A	0.50		eCA0670	a
Connector	eN3-6AF6K4NN60120-24-8-F1-L	F	24	11.50	8	5.40	13.40	2.45	N/A	0.30		eCA0671	a
Connector	eC5-MAFRIN0205-32-28-P1-L	P	32	14.50	28	22.85	19.87	9.10	8.10	0.50		eCA0674	a
Connector	eN5-M3005-16-12-P1-L	P	16	7.50	12	5.20	4.60	5.40	2.90	0.50		eCA0675	a
Connector	eN4-2-0912092-8-16-16-P1-L	P	16	7.50	16	9.65	8.76	5.10	3.30	0.40		eCA0676	a
SR20901	eC4-TPK0003-16-16-F1-L	F	16	7.50	16	9.90	7.70	3.45	N/A	0.40		eCA0679	a
Connector	eC4-470192201-24-12-P1-L	P	24	11.50	12	7.82	10.20	3.30	3.05	0.40		eCA0680	a
Connector	eC4-470192001-24-12-P1-L	P	24	11.50	12	7.82	10.20	3.10	2.85	0.40		eCA0681	a
Connector	eC4-470191901-24-12-P1-L	P	24	11.50	12	7.82	10.20	3	2.75	0.40		eCA0682	a

Copyright © 1999-2024 ePAK International, Inc.

CARRIER TAPE

CONNECTOR(continued)

Device Type	Order Code	Style	W	F	P	AO	BO	KO	K1	T	22"	Drawing	Tool
Connector	eC4-470191501-24-12-P1-L	P	24	11.50	12	7.82	10.20	2.60	2.35	0.40		eCA0683	a
Connector	eC4-470202801-24-12-P1-L	P	24	11.50	12	5.40	15.20	3.85	3.65	0.40		eCA0684	a
Connector	eC4-470201801-24-12-P1-L	P	24	11.50	12	5.40	15.20	2.85	2.65	0.40		eCA0685	a
Connector	eC4-470201601-24-12-P1-L	P	24	11.50	12	5.40	15.20	2.65	2.45	0.40		eCA0686	a
Connector	eC4-470203401-24-12-P1-L	P	24	11.50	12	5.40	15.20	4.45	4.25	0.40		eCA0687	a
Connector	eC5-TPK004007-32-16-F1-L	F	32	14.20	16	11.50	20.50	8	N/A	0.50		eCA0692	a
Connector	eC4-LPY-60SMY1-TP-32-12-F1-L	F	32	14.20	16	4.20	11.20	1.40	N/A	0.40		eCA0693	a
Connector	eC4-LPY-40SMY1-TP-1-32-12-F1-L	F	32	14.20	12	4.20	8.20	1.40	N/A	0.40		eCA0694	a
Connector	eC4-LPY-EA60SFY-TP-1-32-12-F1-L	F	32	14.20	12	6.70	12.80	1.45	N/A	0.40		eCA0695	a
Connector	eC4-;PY-EA40SFY-TP-1-32-12-F1-L	F	32	14.20	12	6.70	9.80	1.45	N/A	0.40		eCA0696	a
Connector	eC4-1000018627-12-8-F1-L	F	12	5.50	8	4.50	4.50	2.73	N/A	0.40		eCA0697	a
Connector	eC4-887962267-24-12-P1-L	P	24	11.50	12	6.30	9.60	4.30	3.80	0.40		eCA0698	a
Connector	eN3-ML-414R/F9K-16-8-P1-L	P	16	7.50	8	4.10	6.50	1.72	N/A	0.30		eCA0699	a
Connector	eN3-ML-414R/F9J-16-8-P1-L	P	16	7.50	8	4.20	5.30	1.72	N/A	0.30		eCA0700	a
Connector	eN4-SA2D14-24-16-F1-L	F	24	11.50	16	14.20	14.20	4	N/A	0.40		eCA0701	a
Connector	eC4-LPY-EA30SFY-TP-1-32-12-F1-L	F	32	14.20	12	6.70	8.30	1.45	N/A	0.40		eCA0704	a
Connector	eC4-LPY-EA70SFY-TP-1-32-12-F1-L	F	32	14.20	12	6.70	14.30	1.45	N/A	0.40		eCA0705	a
Connector	eC4-LPY-EA80SFY-TP-1-32-12-F1-L	F	32	14.20	12	6.70	15.80	1.45	N/A	0.40		eCA0706	a
Connector	eC4-LPY-30SMY1-TP-1-32-12-F1-L	F	32	14.20	12	4.20	6.70	1.40	N/A	0.40		eCA0707	a
Connector	eC4-LPY-70SMY1-TP-1-32-12-F1-L	F	32	14.20	12	4.20	12.70	1.40	N/A	0.40		eCA0708	a

 Copyright © 1999-2024 ePAK International, Inc.

CARRIER TAPE

CONNECTOR(continued)

Device Type	Order Code	Style	W	F	P	AO	BO	KO	K1	T	22"	Drawing	Tool
Connector	eC4-LPY-80SMY1-TP-1-32-12-F1-L	F	32	14.20	12	4.60	14.60	1.40	N/A	0.40		eCA0709	a
Connector	eC4-LPY-30SFY-TP-1-32-112-F1-L	F	32	14.20	12	4.20	8.30	1.40	N/A	0.40		eCA0710	a
Connector	eC4-LPY-60SFY-TP-1-32-12-F1-L	F	32	14.20	12	4.20	12.80	1.40	N/A	0.40		eCA0711	a
Connector	eC4-TPK004706-32-16-F1-L	F	32	14.20	16	10	16	5.80	N/A	0.40		eCA0716	a
Connector	eN4-9JAXR3020-44-24-P1-L	P	44	20.20	24	17.20	18.20	6.90	5.25	0.40		eCA0717	a
Connector	eC4-ZC-707-16-12-F1-L	F	16	7.50	12	6.35	7.11	4.82	N/A	0.40		eCA0732	a
Connector	eC4-51-003-01-44-16-P1-L	P	44	20.20	16	7	31	8.70	7.40	0.40		eCA0743	a
Connector	eC4-51-003-02-72-16-P1-L	P	72	34.20	16	7	56.80	8.70	7.40	0.40		eCA0744	a
Connector	eC4-51-003-03-88-16-P1-L	P	88	42.20	16	7	72.10	8.70	7.40	0.40		eCA0745	a
Connector	eC4-51-003-05-44-16-P1-L	P	44	20.20	16	7	34	8.70	7.40	0.40		eCA0746	a
Connector	eC4-51-003-06-72-16-P1-L	P	72	34.20	16	7	59.30	8.70	7.40	0.40		eCA0747	a
Connector	eC4-51-003-07-88-16-P1-L	P	88	42.20	16	7	74.60	8.70	7.40	0.40		eCA0748	a
Connector	eC4-51-002-02-72-16-P1-L	P	72	34.20	16	7.50	56.80	10	7.40	0.40		eCA0749	a
Connector	eC4-51-002-03-88-16-P1-L	P	88	42.20	16	7.50	72.10	10	7.40	0.40		eCA0750	a
Connector	eN4-950252-56-48-P2-L	P	56	26.20	48	36.50	35.20	4.15	N/A	0.40		eCA0754	a
Connector	eC3-6AF6K4NNETB02-16-8-F1-L	F	16	7.50	8	5.80	9.90	2.20	N/A	0.30		eCA0755	a
Connector	eN5-5-912093-4-24-24-P1-L	P	24	11.50	24	17.30	13.80	12	10	0.50		eCA0757	a
Connector	eN5-5-912093-5-24-24-P1-L	P	24	11.50	24	17.30	13.80	8.70	6.70	0.50		eCA0758	a
Connector	eC4-GP4-SF0904-16-8-P1-L	P	16	7.50	8	6.30	9.50	5.50	5.20	0.40		eCA0763	a
Connector	eN5-4-912093-3-24-12-P1-L	P	24	11.50	12	7.90	24	7.70	6.80	0.50		eCA0772	a
Connector	eC4-3777-G-24-16-P1-L	P	24	11.50	16	9.78	13.20	6.12	5.33	0.40		eCA0779	a

Copyright © 1999-2024 ePAK International, Inc.

CARRIER TAPE

CONNECTOR(continued)

Device Type	Order Code	Style	W	F	P	AO	BO	KO	K1	T	22"	Drawing	Tool
Connector	eN4-1-912095-2-44-12-P1-L	P	44	20.20	12	6	29.10	3.80	3	0.40		eCA0780	a
Connector	eN5-MOJ-B97-46-24-12-P1-L	P	24	11.50	12	7.90	15.60	7.10	6.30	0.50		eCA0781	a
Connector	eN4-SA412B-24-8-F1-L	F	24	11.50	8	4.30	12.40	3.95	N/A	0.40		eCA0783	a
MC-306	EN3-MC-306-16-8-F1-L	F	16	7.50	8	4.10	5.50	2.70	N/A	0.30		eCA0786	a
Connector	eC4-ZC-264-16-12-F1-L	F	16	7.50	12	7.10	8.10	3.50	N/A	0.40		eCA0792	a
Connector	ec4-ZC-724-16-12-F1-L	F	16	7.50	12	6.60	7.87	4.24	N/A	0.40		eCA0793	a
Connector	eC4-ZC-759-24-16-F1-L	F	24	11.50	16	10.70	11.90	6.30	N/A	0.40		eCA0794	a
Connector	eC4-LPY-60PSMY1-TP-1-32-12-P1-L	P	32	14.20	12	4.20	11.20	2	1.40	0.40		eCA0795	a
Connector	eC4-LPY-40PSMY1-TP-1-32-12-P1-L	P	32	14.20	12	4.20	8.20	2	1.40	0.40		eCA0796	a
Connector	eC4-LPY-eA60PSFY-TP-1-32-12-P1-L	P	32	14.20	12	6.70	12.80	2.05	1.45	0.40		eCA0797	a
Connector	eC4-LPY-eA40PSFY-TP-1-32-12-P1-L	P	32	14.20	12	6.70	9.80	2.05	1.45	0.40		eCA0798	a
Connector	eC4-GISI-6741-TP-1-32-12-P1-L	P	32	14.20	12	4.60	18.25	2.35	1.85	0.40		eCA0800	a
Connector	eN5-5-912093-6-24-16-P1-L	P	24	11.50	16	12	9.75	4.12	3.52	0.50		eCA0801	a
Connector	eN3-5-912093-7-24-8-F1-L	F	24	11.50	8	5.30	9.10	3.40	N/A	0.30		eCA0805	a
Connector	eC4-Q20C002-16-12-F1-L	F1	16	7.50	12	6.60	6.10	4.10	N/A	0.40		eCA0806	a
Connector	eC4-5334-965-391000-16-8-F1-L	F1	16	7.50	8	3.80	5.80	2.65	N/A	0.40		eCA0807	a
Connector	eC3-5334-965-371000-24-8-F1-L	F1	24	11.50	8	4.50	15.40	3.90	N/A	0.30		eCA0808	a
Connector	eC4-AJ427-24-12-P1-L	P	24	11.50	12	7	12.30	4.90	3.90	0.40		eCA0810	a
Connector	eC4-LPY-30PSMY1-TP-1-32-12-P1-L	P	32	14.20	12	4.20	6.70	2	1.40	0.40		eCA0812	a
Connector	eC4-LPY-70PSMY1-TP-1-32-12-P1-L	P	32	14.20	12	4.20	12.70	2	1.40	0.40		eCA0813	a
Connector	eC4-LPY-80PSMY1-TP-32-12-P1-L	P	32	14.20	12	4.20	14.60	2	1.40	0.40		eCA0814	a

Copyright © 1999-2024 ePAK International, Inc.

CARRIER TAPE

CONNECTOR(continued)

Device Type	Order Code	Style	W	F	P	AO	BO	KO	K1	T	22"	Drawing	Tool
Connector	eC4-LPY-30PSFY-TP-1-32-12-P1-L	P	32	14.20	12	4.20	8.30	2	1.40	0.40		eCA0815	a
Connector	eC4-LPY-60PSFY-TP-1-32-12-P1-L	P	32	14.20	12	4.20	12.80	2	1.40	0.40		eCA0816	a
Connector	eC4-LPY-EA70PSFY-TP-1-32-12-P1-L	P	32	14.20	12	6.70	14.30	2.05	1.45	0.40		eCA0817	a
Connector	eC4-LPY-EA80PSFY-TP-1-32-12-P1-L	P	32	14.20	12	6.70	15.80	2.05	1.45	0.40		eCA0818	a
Connector	eC4-ZC-277-16-12-F1-L	F1	16	7.50	12	7.44	8.38	5.54	N/A	0.40		eCA0819	a
Connector	eC4-AKX-20LFY-TPA-01-24-16-P1-L	P	24	11.50	16	11	11.50	6.90	5.40	0.40		eCA0820	a
Connector	eC4-MPT16B-24-24-F1-L	F1	24	11.50	24	20	16.40	3.30	N/A	0.40		eCA0821	a
Connector	eN4-5444396-4E2(H30)-32-12-F1-L	F	32	14.20	12	8	20.20	3.70	N/A	0.40		eCA0825	a
Connector	eN4-5444396-4E2(H50)-32-12-F1-L	F	32	14.20	12	8	30.20	3.70	N/A	0.40		eCA0826	a
MOJ-B104	eN5-MOJ-B104-24-12-P1-L	P	24	11.50	12	9.40	14.50	6.10	5.30	0.50		eCA0828	a
Connector	eC2.5-3.5X5.4X1.0-12-8-F1-L	F	12	5.50	8	3.50	5.40	1	N/A	0.25		eCA0829	a
Connector	eN4-1000011482-12-8-F1-L	F1	12	5.50	8	6	4.60	4	N/A	0.40		eCA0831	a
Connector	eC4-ZC-110-24-16-F1-L	F1	24	11.50	16	10.53	8.23	5.59	N/A	0.40		eCA0832	a
Connector	eC5-TPK004006-32-16-F1-L	F1	32	14.20	16	11.50	18	8	N/A	0.50		eCA0833	a
Connector	eN4-99-TeC-0038-24-16-F1-L	F	24	11.50	16	12.80	12.80	8	N/A	0.40		eCA0834	a
Connector	eC5-ZC-639-56-40-F1-L	F	56	26.20	40	32.30	32.30	9.80	N/A	0.50		eCA0836	a
51-008-01	eC4-51-008-01-24-16-P1-L	P	24	11.50	16	10.85	15.54	3.90	2.30	0.40		eCA0842	a
51-008-02	eC4-51-008-02-24-16-P1-L	P	24	11.50	16	10.85	13.00	3.90	2.30	0.40		eCA0843	a
51-008-03	eC4-51-008-03-44-16-P1-L	P	44	20.20	16	10.85	30.78	3.90	2.30	0.40		eCA0844	a
51-008-04	eC4-51-008-04-44-16-P1-L	P	44	20.20	16	10.85	28.24	3.90	2.30	0.40		eCA0845	a
51-008-05	eC4-51-008-05-72-16-P1-L	P	72	34.20	16	10.85	56.18	3.90	2.30	0.40		eCA0846	a
51-008-06	eC4-51-008-06-72-16-P1-L	P	72	34.20	16	10.85	53.64	3.90	2.30	0.40		eCA0847	a

Copyright © 1999-2024 ePAK International, Inc.

CARRIER TAPE

CONNECTOR(continued)

Device Type	Order Code	Style	W	F	P	AO	BO	KO	K1	T	22"	Drawing	Tool
1000013850	eC4-1000013850-16-12-F1-L	F	16	7.50	12	6.55	6.22	4.22	N/A	0.40		eCA0848	a
51-009-01	eC4-51-009-01-24-16-P1-L	P	24	11.50	16	10.85	15.54	6.40	4.80	0.40		eCA0849	a
51-009-02	eC4-51-009-02-24-16-P1-L	P	24	11.50	16	10.85	13.00	6.40	4.80	0.40		eCA0850	a
51-009-03	eC4-51-009-03-44-16-P1-L	P	44	20.20	16	10.85	30.78	6.40	4.80	0.40		eCA0851	a
51-009-04	eC4-51-009-04-44-16-P1-L	P	44	20.20	16	10.85	28.24	6.40	4.80	0.40		eCA0852	a
51-009-05	eC4-51-009-05-72-16-P1-L	P	72	34.20	16	10.85	56.18	6.40	4.80	0.40		eCA0853	a
51-009-06	eC4-51-009-06-72-16-P1-L	P	72	34.20	16	10.85	53.64	6.40	4.80	0.40		eCA0854	a
LVC-C30SFYGTP-1	eCN4-LVC-C30SFYGTP-1-32-12-P1-L	P	32	14.20	12	3.90	21.40	4.00	3.00	0.40		eCA0861	a
LVC-C40SFYGTP-1	eCN4-LVC-C40SFYGTP-1-44-12-P1-L	p	44	20.20	12	3.90	26.40	4.00	3.00	0.40		eCA0862	a
1001-0026	eC5-1001-0026-44-12-F1-L	F	44	20.20	12	7.00	32.90	5.60	N/A	0.50		eCA0863	a
EFD20	eC4-EFD20-44-32-P1-L	P	44	20.20	32	22.10	26.40	10.16	7.26	0.40		eCA0864	a
3740007	eC4-3740007-72-24-F1-L	F	72	34.20	24	15.30	54.40	4.30	N/A	0.40		eCA0865	a
1001-0005	eC5-1001-0005-44-12-F1-L	F	44	20.20	12	7.00	24.30	5.60	N/A	0.50		eCA0866	a
LVX-A30SFYG-TP-1	eC4-LVX-A30SFYG-TP-1-32-8-P1-L	P	32	14.20	8.	5.80	16.90	1.90	1.50	0.40		eCA0867	a
A3	eN3-A3-24-8-F1-L	F	24	11.50	8	4.15	12.10	1.50	N/A	0.30		eCA0871	a
2-912094-5	eN4-2-912094-5-32-12-P1-L	P	32	14.20	12	9.00	18.30	4.00	3.60	0.40		eCA0872	a
TB154-0400	eN4-TB154-0400-56-32-P1-L	P	56	26.20	32	27.00	36.10	10.60	9.60	0.40		eCA0873	a
TET16C	eN4-TET16C-16-12-F1-L	F	16	7.50	12	8.10	7.60	6.00	N/A	0.40		eCA0875	a
TET16D	eN4-TET16D-16-12-F1-L	F	16	7.50	12	9.10	8.60	6.00	N/A	0.40		eCA0876	a
64005700	eC3-64005700-12-8-F1-L	F	12	5.50	8	5.45	5.45	2.00	N/A	0.30		eCA0877	a
CAA(PCP50X15PS)TL	eC3-CARR(PCP50X15PS)TL-12-8-F1-L	F	12	5.65	8	4.80	4.45	1.70	N/A	0.30		eCA0878	a
1000022928Rev.-	eN4-1000022928Rev.--16-8-F1-L	F	16	7.50	8	5.80	6.80	5.00	N/A	0.40		eCA0880	a

Copyright © 1999-2024 ePAK International, Inc.

CARRIER TAPE

CONNECTOR(continued)

Device Type	Order Code	Style	W	F	P	AO	BO	KO	K1	T	22"	Drawing	Tool
J-14-029	eC3-J-14-029-12-4-F1-L	F	12	5.50	4	2.80	3.50	1.00	N/A	0.30		eCA0881	a
MA-0123	eC4-MA-0123-24-8-F1-L	F	24	11.50	8	5.40	14.00	4.20	N/A	0.40		eCA0883	a
9JAXS6442	eN4-9JAXS6442-56-24-F1-L	F	56	26.20	24	20.40	35.00	7.40	N/A	0.40		eCA0884	a
SU5011	eC3-SU5011-12-8-F1-L	F	12	5.50	8	5.45	5.45	1.35	N/A	0.30		eCA0885	a
SH3016	eC3-SH3016-12-8-F1-L	F	12	5.50	8	4.15	4.15	2.00	N/A	0.30		eCA0886	a
SH5028	eC3-SH5028-16-12-F1-L	F	16	7.50	12	6.40	6.35	3.30	N/A	0.30		eCA0887	a
SH5018	eC3-SH5018-16-12-P1-L	P	16	7.50	12	6.10	6.10	2.40	2.10	0.30		eCA0888	a
SH4018	eC3-SH4018-12-8-P1-L	P	12	5.50	12	5.10	5.10	2.40	2.10	0.30		eCA0889	a
LVX-A40SFYG-TP-1	eC4-LVX-A40SFYG-TP-1-32-8-P1-L	P	32	14.20	8	5.80	20.90	1.90	N/A	0.40		eCA0890	a
SR0805	eC4-SR0805-16-12-P1-L	P	16	7.50	12	7.80	7.80	5.30	4.40	0.40		eCA0893	a
SR0603	eC5-SR0603-12-8-P1-L	P	12	5.50	8	5.90	5.90	4.00	3.20	0.50		eCA0894	a
MG804	eC5-MG804-00040-24-20-P1-L	P	24	11.50	20	8.60	8.60	10.30	8.30	0.50		eCA0895	a
SDA-R11LFYG-TP-1	eN4-SDA-R11LFYG-TP-1-44-32-P1-L	P	44	20.20	32	22.80	27.00	3.60	2.60	0.40		eCA0935	a
MFP24	eC3-MFP24-24-12-P1-L	P	24	11.50	12	9.10	13.60	2.40	2.20	0.30		eCA0937	a
DCCOX-30L3	eN4-DCCOX-40L3-44-32-P1-L	P	44	20.20	32	3.20	23.07	2.20	1.60	0.40		eCA0939	a
DCCOX-50L3	eN4-DCCOX-50L3-44-12-P1-L	P	44	20.20	12	3.20	27.37	2.50	1.90	0.40		eCA0942	a
SR-20893	eC4-SR-20893-16-12-P1-L	P	16	7.50	12	4.10	4.10	5.80	N/A	0.40		eCA0951	a
1000022479	eC5-1000022479-44-44-P1-L	P	44	20.20	44	32.50	31.20	11.80	8.00	0.50		eCA0954	a
TB156-0400	eN4-TB156-0400-44-24-P1-L	P	44	20.20	24	21.20	32.50	4.10	3.30	0.40		eCA0962	a
64006200	eC4-64006200-16-12-F1-L	F	16	7.50	12	6.60	7.10	5.20	N/A	0.40		eCA0963	a
DFR-PAV040-1-EBTP	eN4-DFR-PAV040-1-EBTP-44-20-P1-L	P	44	20.20	20	10.30	26.50	5.60	4.60	0.40		eCA0965	a
EFR-DAV040-1036-EBTP	eN4-DFR-DAV040-1036-EBTP-44-20-P1-L	P	44	20.20	20	5.50	25.00	5.60	4.60	0.40		eCA0966	a

Copyright © 1999-2024 ePAK International, Inc.

CARRIER TAPE

CONNECTOR(continued)

Device Type	Order Code	Style	W	F	P	AO	BO	KO	K1	T	22"	Drawing	Tool
CPT405	eC4-CPT405-56-56-F1-L	F	56	26.20	56	46.20	40.80	6.30	N/A	0.40		eCA0970	a
CPT403	eC4-CPT403-16-12-P1-L	P	16	7.50	12	8.20	7.90	4.20	3.10	0.40		eCA0972	a
1000022808Rev.-	eC4-1000022808Rev.--12-8-F1-L	F	12	5.50	8	4.05	4.30	3.45	N/A	0.40		eCA0973	a
5-912103-0	eN5-5-912103-0-88-24-P1-L	P	88	42.20	24	17.00	68.40	8.20	6.00	0.50		eCA0974	a
DMS3450DJ01	eN5-DMS3450DJ01-56-40-P1-L	P	56	26.20	40	34.50	42.50	10.50	9.00	0.50		eCA0975	a
MG804	eC4-MG804-00049-16-12-P1-L	P	16	7.50	12	6.10	8.83	4.90	4.50	0.40		eCA0978	a
1000017249Rev.-	eN4-SR20901-56-56-F1-L	F	56	26.40	56	41.00	40.00	5.00	N/A	0.40		eCA0979	a
1533250-1	eN4-1533250-1-72-12-P1-L	P	72	34.20	12	7.90	48.10	6.05	5.05	0.40		eCA0980	a
DCCOX-10L3	eEN4-DCCOX-10L3-32-12-P1-L	P	32	14.20	12	3.20	8.07	2.20	1.60	0.40		eCA0982	a
DCCOX-20L3	eN4-DCCOX-20L3-32-12-P1-L	P	32	14.20	12	3.20	13.07	2.20	1.60	0.40		eCA0983	a
5.4X7.4X1.5	eC3-5.4X7.4X1.5-16-8-F1-L	F	16	7.50	8	5.40	7.40	1.50	N/A	0.30		eCA0985	a
DCCOX-23L3	eN4-DCCOX-23L3-32-12-P1-L	P	32	14.20	12	3.20	14.57	2.20	1.60	0.40		eCA0986	a
TPK005901	eC4-TPK005901-24-8-F1-L	F	24	11.50	8	5.30	11.00	4.80	N/A	0.40		eCA0988	a
TPK005901	eC4-TPK005901-24-8-F1-L	F	24	11.50	8	5.30	11.00	4.80	N/A	0.40		eCA0988	a
TPK0003	eC4-7314-G-24-16-F1-L	F	24	11.50	16	10.50	10.50	25.60	N/A	0.40		eCA0994	a
TP-K-0015	eC4-TP-K-0015-16-12-F1-L	F	16	7.50	12	6.50	7.40	8.20	N/A	0.40		eCA0998	a
7314-G	eN4-1533250-2-72-16-P1-L	P	72	34.20	16	9.74	57.95	6.60	4.15	0.40		eCA1001	a
64012600	eC3-64012600-12-8-F1-L	F	12	5.50	8	5.10	4.60	1.60	N/A	0.30		eCA1002	a
HCJ-S-9075	eN4-HCJ-S-9075-24-12-F2-L	F	24	11.50	12	5.00	15.00	4.35	N/A	0.40		eCA1003	a
6-68-0052-00	eC3-6-68-0052-00-12-12-F1-L	F	12	5.50	12	6.90	3.30	2.40	N/A	0.30		eCA1011	a
647c-b	eC4-647c-b-56-20-F1-L	F	56	26.20	20	11.58	39.78	6.60	N/A	0.40		eCA1014	a
LVX-A30SFYG-TPA-1	eC4-LVX-A30SFYG-TPA-1-32-16-P2-L	P	32	14.20	16	5.80	16.90	1.90	1.50	0.40		eCA1015	a
7403-G	eC5-7403-G-44-28-F1-L	F	44	20.20	28	19.30	16.50	13.00	N/A	0.50		eCA1016	a

Copyright © 1999-2024 ePAK International, Inc.

CARRIER TAPE

CONNECTOR(continued)

Device Type	Order Code	Style	W	F	P	AO	BO	KO	K1	T	22"	Drawing	Tool
0220-0043-05	eC5-0220-0043-05-24-16-P1-L	P	24	11.50	16	10.92	12.83	8.64	7.11	0.50		eCA1019	a
0220-0043-03	eC5-0220-0043-03-24-16-P1-L	P	24	11.50	16	10.92	15.88	7.49	5.97	0.50		eCA1020	a
1827439	eC4-1827439-24-12-P1-L	P	24	11.50	12	8.05	11.70	5.80	4.70	0.40		eCA1021	a
P39599-100P	eN5-P39599-100P-44-16-P1-L	P	44	20.20	16	5.70	28.30	5.00	4.00	0.50		eCA1022	a
P39599	eN5-P39599-140P-56-16-P1-L	P	56	26.20	16	5.70	38.30	5.00	4.00	0.50		eCA1023	a
P39598-100P	eN5-P39598-100P-44-16-P1-L	P	44	20.20	16	10.00	33.00	5.50	4.50	0.50		eCA1024	a
P39598	eN5-P39598-140P-56-16-P1-L	P	56	26.20	16	10.00	42.00	5.50	4.50	0.50		eCA1025	a
DCCOO-10S	eN4-DCCOO-10S-32-12-P1-L	P	32	14.20	12	2.20	8.37	4.35	3.75	0.40		eCA1027	a
DCCOO-20S	eN4-DCCOO-20S-32-12-P1-L	P	32	14.20	12	2.20	13.37	4.35	3.75	0.40		eCA1028	a
DCCOO-30S	eN4-DCCOO-30S-44-12-P1-L	P	44	20.20	12	2.20	18.37	4.35	3.75	0.40		eCA1029	a
DCCOO-40S	eN4-DCCOO-40S-44-12-P1-L	P	44	20.20	12	2.20	23.37	4.35	3.75	0.40		eCA1030	a
DCCOO-50S	eN4-DCCOO-50S-44-12-P1-L	P	44	20.20	12	2.20	28.37	4.35	3.75	0.40		eCA1031	a
0-0097195-8	eN4-0-0097195-8-88-16-P1-L	P	88	42.20	16	8.50	62.10	8.25	7.25	0.40		eCA1032	a
0-112344-2	eC4-0-112344-2-88-16-P1-L	P	88	42.20	16	6.30	63.00	6.00	5.00	0.40		eCA1033	a
7436-G	eC4-7436-G-24-16-F1-L	F	24	11.50	16	12.00	14.00	5.30	N/A	0.40		eCA1039	a
TPK0063	eC4-TPK0063-44-16-P1-L	P	44	20.20	16	8.90	22.70	6.60	5.30	0.40		eCA1045	a
64004700	eC4-64004700-32-24-P1-L	P	32	14.20	24	16.80	19.60	7.70	6.90	0.40		eCA1046	a
64000400	eC4-64000400-24-16-F1-L	F	24	11.50	16	11.80	11.80	6.80	N/A	0.40		eCA1056	a
64000300	eC3-64000300-24-16-F1-L	F	24	11.50	16	11.80	11.80	5.00	N/A	0.30		eCA1057	a
64005800	eC4-64005800-24-16-F1-L	F	24	11.50	16	13	13	6.30	N/A	0.40		eCA1058	a
64000100	eC3-64000100-24-12-F1-L	F	24	11.50	12	9.30	9.30	4.60	N/A	0.30		eCA1059	a
64006000	eC3-64006000-16-12-F1-L	F	16	7.50	12	7.90	7.90	3.80	N/A	0.30		eCA1060	a
64000800	eC4-64000800-16-12-F1-L	F	16	7.50	12	10	6.20	6	N/A	0.40		eCA1061	a

Copyright © 1999-2024 ePAK International, Inc.

CARRIER TAPE

CONNECTOR(continued)

Device Type	Order Code	Style	W	F	P	AO	BO	KO	K1	T	22"	Drawing	Tool
64000200	ec4-64000200-24-12-F1-L	F	24	11.50	12	9.30	9.30	6.40	N/A	0.40		eCA1062	a
64001600	eC4-64001600-16-12-P1-L	P	16	7.50	12	6	8.60	5.60	4.40	0.40		eCA1063	a
64000600	eC5-64000600-24-24-F1-L	F	24	11.50	24	15.70	16.90	8.30	N/A	0.50		eCA1064	a
64006100	eC4-64006100-16-12-F1-L	F	16	7.50	12	7.90	7.90	4.90	N/A	0.40		eCA1065	a
64000700	eC4-64000700-32-32-F1-L	F	32	14.20	32	22.80	16.70	8.70	N/A	0.40		eCA1066	a
CK-CX-TF-T-A02	eC4-CK-CX-TF-T-A02-24-20-F1-L	F	24	11.50	20	14.30	15.60	2.80	N/A	0.40		eCA1067	a
961A	eC4-961A-32-20-F1-L	F	32	14.20	20	15.24	21.13	6.60	N/A	0.40		eCA1072	a
244C	eC4-244C-44-16-F1-L	F	44	20.20	16	8.51	25.50	6.60	N/A	0.40		eCA1073	a
5812	eC4-5812-32-16-F1-L	F	32	14.20	16	8.51	21.13	6.60	N/A	0.40		eCA1074	a
9JAXR5009	eN4-9JAXR5009-32-16-P1-L	P	32	14.20	16	7.35	13.80	5.20	3.60	0.40		eCA1076	a
64004800	eC4-64001800-32-16-P1-L	P	32	14.20	16	12.80	18.90	7.70	5.90	0.40		eCA1077	a
64003700	eC4-64003700-44-20-F1-L	F	44	20.20	20	17	26.50	7.90	N/A	0.40		eCA1083	a
112934-1	eC5-112934-1-44-24-P1-L	P	44	20.20	24	14.25	22.32	13.80	10.05	0.50		eCA1106	a
SR-21013	eC4-SR-21013-56-56-P1-L	P	56	26.20	56	37.90	37.10	5.50	5.10	0.40		eCA1117	a
1533222-2	eN5-1533222-2-24-16-P1-L	P	24	11.50	16	6.10	16.00	7.55	6.55	0.50		eCA1132	a
0220-8888-11	eC5-0220-8888-11-32-20-F1-L	F	32	14.20	20	13.46	18.16	10.67	N/A	0.50		eCA1141	a
LVC-D22SFYGTP-1	eN4-LVC-D22SFYGTP-1-24-8-P1-L	P	24	11.50	8	3.90	15.30	4.00	3.00	0.40		eCA1143	a
0220-0021-27	eC5-0220-0021-27-24-16-F1-L	F	24	11.50	16	9.65	12.70	7.24	N/A	0.50		eCA1144	a
0220-4000-01	eC5-0220-4000-01-24-16-P1-L	P	24	11.50	16	9.40	13.00	5.33	5.08	0.50		eCA1149	a
0220-0059-01	eC5-0220-0059-01-44-24-P1-L	P	44	20.20	24	12.52	28.07	9.14	7.60	0.50		eCA1158	a

Copyright © 1999-2024 ePAK International, Inc.

CARRIER TAPE

CONNECTOR(continued)

Device Type	Order Code	Style	W	F	P	AO	BO	KO	K1	T	22"	Drawing	Tool
831D01F20FC1003	eC5-831D01F20FC1003-44-20-P1-L	P	44	20.20	20	3.30	23.80	12.70	11.35	0.50		eCA1161	a
99-0818-01	eN4-99-0818-01-24-16-F1-L	F	24	11.50	16	8.40	8.50	6.85		0.40		eCA1162	a
99-T006	eC3-99-T006-12-8-F1-L	F	12	5.50	8	3.40	3.60	1.60		0.30		eCA1163	a
9JAXA1002	eN4-9JAXA1002-44-36-P1-L	P	44	20	36	25.50	26.00	5.25	2.75	0.40		eCA1164	a
TPK0065	eC5-TPK0065-24-16-P1-L	P	24	11.50	16	8.90	7.90	5.85	3.85	0.50		eCA1167	a
D004743	eC3-D004743-02040B-44-20-P1-L	P	44	20.20	20	15.35	30.35	3.20	2.50	0.30		eCA1168	a
0220-0206-24	eC4-0220-0206-24-24-8-F1-L	F	24	11.50	8	3.00	10.80	2.75		0.40		eCA1170	a
TPK004709	eC4-TPK004709-44-16-F1-L	F	44	20.20	16	10.00	25.60	5.80		0.40		eCA1171	a
5-912093-7	eN3-5-912093-7-24-8-F1-L	F	24	11.50	8	5.30	9.10	3.40		0.30		eCA1172	a
CK-CX-TF-T-A04	eC4-CK-CX-TF-T-A04-24-20-P1-L	P	24	11.50	20	13.80	14.24	2.70	2.10	0.40		eCA1173	a
1000028061-CTPK012	eC4-1000028061-CTPK012-12-8-F1-L	F	12	5.50	8	4.55	4.75	3.10		0.40		eCA1194	a
TPK003510	eC4-TPK003510-44-16-F1-L	F	44	20.20	16	10.00	28.10	4.80		0.40		eCA1197	a
TPK003502	eC4-TPK003502-24-16-F1-L	F	24	11.50	16	10.00	7.90	4.80		0.40		eCA1198	a
TPK003503	eC4-TPK003503-24-16-F1-L	F	24	11.50	16	10.00	10.40	4.80		0.40		eCA1199	a
7979642	eN4-7979642-0-24-8-P1-L	P	24	11.50	8	3.60	14.30	1.70	1.50	0.40		eCA1206	a
1000029214-CTPK016	eC4-1000029214-CTPK016-16-12-F1-L	F	16	7.50	12	6.70	7.50	3.60		0.40		eCA1207	a
SR-21097	eC5-SR-21097-104-72-F1-L	F	104	50.20	72	58.40	65.30	13.65		0.50		eCA1211	a
ML414RH/F9CL	eN3-ML414RH/F9CL-16-8-P1-L	P	16	7.50	8	3.60	10.00	1.85		0.30		eCA1212	a
CKCXTSTA07	eC3-CKCXTSTA07-24-24-P1-L	P	24	11.50	24	17.75	16.70	3.20	3.00	0.30		eCA1219	a
1000029084-CTPK012	eC4-1000029084-CTPK012-12-8-F1-L	F	12	5.50	8	5.90	4.55	3.80		0.40		eCA1220	a

 Copyright © 1999-2024 ePAK International, Inc.

CARRIER TAPE

CONNECTOR(continued)

Device Type	Order Code	Style	W	F	P	AO	BO	KO	K1	T	22"	Drawing	Tool
FK-TAP-002	eN4-FK-TAP-002-16-12-F1-L	F	16	7.50	12	6.40	6.70	5.25		0.40		eCA1221	a
TPK006608	eC4-TPK006608-44-16-F1-L	F	44	20.20	16	8.90	22.70	5.85		0.40		eCA1228	a
	eC3-3AE6K6P000001-24-16-F1-L	F	24	11.50	16	11.35	11.85	1.80		0.30		eCA1246	a
	eC5-TPI005504-24-16-F1-L	F	24	11.50	16	13.30	12.10	9.50		0.50		eCA1249	a
	eC5-TPI006906-32-16-F1-L	F	32	14.20	16	12.30	17.20	9.50		0.50		eCA1250	a
	eN3-ML414RH/F90E-16-8-P1-L	P	16	7.50	8	3.90	5.85	2.45	1.85	0.30		eCA1251	a
	eN5-ZC-276-12-8-F1-L	F	12	5.50	8	5.60	5.60	5.00		0.50		eCA1252	a
	eN5-G6Z-32-16-F1-L	F	32	14.20	16	11.20	20.60	9.90		0.50		eCA1253	a
	eC4-TPK004703-24-16-F1-L	F	24	11.50	16	10.00	10.40	5.80		0.40		eCA1254	a
	eN4-G275-24-12-P1-L	P	24	11.50	12	7.30	11.90	4.70	2.30	0.40		eCA1256	a
	eC3-3AE6K6P000002-24-16-F1-L	F	24	11.50	16	11.35	14.35	1.80		0.30		eCA1258	a
	eC4-99-0965-00-24-16-F1-L	F	24	11.50	16	10.70	12.10	3.30		0.40		eCA1259	a
	eN4-LVC-D10SYGTP-1-24-8-P1-L	P	24	11.50	8	3.90	10.30	4.00	3.00	0.40		eCA1260	a
	eC4-99-0966-00-24-16-F1-L	F	24	11.50	16	10.50	12.00	5.20		0.40		eCA1262	a
	eN4-DP3-155404-2-32-24-P1-L	P	32	14.20	24	15.40	17.40	3.35	2.65	0.40		eCA1263	a
	eN5-99-0919-01-32-20-P1-L	P	32	14.20	20	10.90	13.00	10.50	10.10	0.50		eCA1264	a
	eN4-99-0786-01-16-12-F1-L	F	16	7.50	12	8.60	8.90	5.20		0.40		eCA1265	a
	eN3-99-0934-01-12-8-F1-L	F	12	5.50	8	4.75	4.95	2.00		0.30		eCA1266	a
	eN3-99-0944-01-12-8-F1-L	F	12	5.50	8	3.05	3.25	1.70		0.30		eCA1267	a
	eN3-99-0929-01-12-8-F1-L	F	12	5.50	8	3.05	3.25	1.30		0.30		eCA1269	a
	eN3-99-0914-01-12-8-F1-L	F	12	5.50	8	3.35	3.35	1.70		0.30		eCA1270	a
	eN3-99-0914-01-12-8-F1-L	F	12	5.50	8	4.25	4.25	1.40		0.30		eCA1271	a
	eN5-XX-32-24-F1-L	F	32	14.20	24	13.80	14.60	13.60		0.50		eCA1272	a

Copyright © 1999-2024 ePAK International, Inc.

CARRIER TAPE

CONNECTOR(continued)

Device Type	Order Code	Style	W	F	P	AO	BO	KO	K1	T	22"	Drawing	Tool
	eN3-DP3-154322-0-24-8-F1-L	F	24	11.50	8	5.10	12.70	1.70		0.30		eCA1275	a
	eN3-DP3-154323--5-24-8-F1-L	F	24	11.50	8	5.10	14.50	1.70		0.30		eCA1276	a
	eC5-CKCXMUTA08-16-16-P1-L	P	16	7.50	16	9.00	7.00	7.50	4.25	0.50		eCA1278	a
	eC4-FLXP-FCGIPD-991-32-16-P1-L	P	32	14.20	16	8.75	8.75	6.60	6.30	0.40		eCA1283	a
	eN4-99-0968-0(1)-24-16-F1-L	F	24	11.50	16	8.40	8.50	6.10		0.40		eCA1284	a
	eN4-99-0968-0(2)-16-12-F1-L	F	16	7.50	12	8.40	8.50	6.10		0.40		eCA1285	a
	eC3-CKCXSIMCA08-32-20-P1-L	P	32	14.20	20	13.90	16.70	2.30	2.10	0.30		eCA1286	a
	eN4-SS2368-32-16-P1-L	P	32	14.20	16	5.30	15.20	5.20	4.00	0.40		eCA1289	a
	eC4-TPPZ0001-56-56-P1-L	P	56	26.20	56	45.00	36.50	5.80	4.65	0.40		eCA1290	a
	eC3-POWERMITE-01-12-4-F1-L	F	12	5.50	4	2.00	5.15	1.20		0.30		eCA1292	a
	eC3-1-3SEG-S2JP15-16-12-F1-L	F	16	7.50	16	8.65	8.35	1.40		0.30		eCA1293	a
	eC3-POWERMITE-03-16-8-F1-L	F	16	7.50	8	4.30	7.90	1.35		0.30		eCA1294	a
	eC4-6-68-0056-00-24-12-F1-L	F	24	11.50	12	3.40	11.30	2.40		0.40		eCA1298	a
	eN4-XF2W-3905497-8-44-8-P1-L	P	44	20.20	8	3.60	34.30	2.37	2.17	0.40		eCA1299	a
	eN4-XF3H-9979681-7-32-8-F1-L	F	32	14.20	8	3.58	18.78	1.10		0.40		eCA1300	a
	eN4-XF3H-3H61-32-8-F1-L	F	32	14.20	8	3.58	19.98	1.10		0.40		eCA1301	a
	eN4-XF2M-6914217-0-44-12-F1-L	F	44	20.20	12	6.20	30.00	3.30		0.40		eCA1302	a
	eN4-XF2M-6914215-4-44-12-F1-L	F	44	20.20	12	6.20	25.00	3.30		0.40		eCA1303	a
	eN4-XF2M-7906717-7-44-12-F1-L	F	44	20.20	12	6.20	27.50	3.30		0.40		eCA1304	a
	eC3-TPK00724P-16-12-P1-L	P	16	7.50	12	7.50	7.00	2.20	1.70	0.30		eCA1313	a
	eC3-TPK00728P-24-12-P1-L	P	24	11.50	12	7.50	12.10	2.20	1.70	0.30		eCA1314	a
	eC5-1706285-1-44-20-P1-L	P	44	20.20	20	7.75	14.74	10.88	9.38	0.50		eCA1315	a
	eC5-1706284-1-44-28-P1-L	P	44	20.20	28	18.78	22.86	13.96	9.66	0.50		eCA1316	a
	eN4-9JAXA2R001-44-36-P1-L	P	44	20.20	36	30.65	28.45	6.20	3.10	0.50		eCA1317	a

Copyright © 1999-2024 ePAK International, Inc.

CARRIER TAPE

CONNECTOR(continued)

Device Type	Order Code	Style	W	F	P	AO	BO	KO	K1	T	22"	Drawing	Tool
	eN3-XF2S-2S45-32-8-F1-L	F	32	14.20	8	5.20	18.80	0.75		0.30		eCA1319	a
	eC3-CKCXTFTA12-24-16-P1-L	P	24	11.50	16	12.20	12.50	2.50	2.30	0.30		eCA1322	a
	eN4-99-0976-01-24-16-F1-L	F	24	11.50	16	10.60	10.60	5.20		0.40		eCA1326	a
	eN4-99-0978-01-24-16-F1-L	F	24	11.50	16	10.60	10.60	4.20		0.40		eCA1327	a
	eN3-Nypro-16-16-F1-L	F	16	7.50	16	6.55	6.60	2.50		0.30		eCA1328	a
	eN4-99-0986-01-24-8-F1-L	F	24	11.50	8	4.10	12.40	3.95		0.40		eCA1332	a
	eC3-3AE3K3P000003-16-12-F1-L	F	16	7.50	12	8.85	8.85	1.40		0.30		eCA1333	a
	eC5-SM-173-32-20-F1-L	F	32	14.20	20	15.40	15.40	5.40		0.50		eCA1334	a
	eC4-7090-16-12-F1-L	F	16	7.50	12	7.60	9.40	5.00		0.40		eCA1335	a
	eC3-TK-0027-12-8-F1-L	F	12	5.50	8	5.20	2.80	1.60		0.30		eCA1336	a
	eN4-XF2U-7979643-8-24-8-P1-L	P	24	11.50	8	3.60	17.30	1.70	1.50	0.40		eCA1337	a
	eN4-XF2U-9979928-0-16-8-P1-L	P	16	7.50	8	3.60	6.30	1.70	1.50	0.40		eCA1338	a
	eN4-XF2U-9951191-0-16-8-P1-L	P	16	7.50	8	3.60	7.80	1.70	1.50	0.40		eCA1339	a
	eN4-XF2W-W16-24-8-P1-L	P	24	11.50	8	3.60	10.30	1.77	1.57	0.40		eCA1340	a
	eN3-99-0901-01-12-8-F1-L	F	12	5.50	8	3.05	3.25	2.00		0.30		eCA1341	a
	eC4-99-0981-00-12-8-F1-L	F	12	5.50	8	5.30	5.30	3.30		0.40		eCA1346	a
	eC4-99-0982-00-16-12-F1-L	F	16	7.50	12	7.00	7.80	4.30		0.40		eCA1347	a
	eC3-S2NA20-16-8-F1-L	F	16	7.50	8	6.25	7.75	1.40		0.30		eCA1349	a
	eN4-F4DSDR-12-8-F1-L	F	12	5.50	8	5.50	5.40	2.30		0.40		eCA1352	a
	eC4-TPK0071-44-16-F1-L	F	44	20.20	16	10.00	22.70	6.60		0.40		eCA1354	a
	eN4-9JAXA2R002-44-36-P1-L	P	44	20.20	36	31.37	28.55	6.20	3.80	0.40		eCA1355	a

Copyright © 1999-2024 ePAK International, Inc.

CARRIER TAPE

CONNECTOR(continued)

Device Type	Order Code	Style	W	F	P	AO	BO	KO	K1	T	22"	Drawing	Tool
	eC5-EP13-32-24-P1-L	P	32	14.20	24	13.80	19.50	12.79	10.95	0.50		eCA1405	a
	eN4-2-912144-2-24-16-P1-L	P	24	11.50	16	8.70	16.50	11.00	7.80	0.40		eCA1416	a
	eN4-M10-7906720-7-24-12-F1-L	F	24	11.50	12	5.10	10.00	3.30		0.40		eCA1421	a
	eN4-M18-7942686-0-24-12-F1-L	F	24	11.50	12	5.10	14.00	3.30		0.40		eCA1422	a
	eN5-99-1007-01-32-20-P1-L	P	32	14.20	20	11.80	16.10	10.50	10.20	0.50		eCA1423	a
	eC3-PCB-32-16-P1-L	P	32	14.20	16	11.00	21.30	4.40	3.80	0.30		eCA1426	a
	eN4-XF2W-W20-3905500-1-24-8-P1-L	P	24	11.50	8	3.60	12.30	1.77	1.57	0.40		eCA1428	a
	eN4-XF2W-W24-3905499-4-24-8-P1-L	P	24	11.50	8	3.60	14.30	1.77	1.57	0.40		eCA1429	a
	eN4-XF2U-U18-7960758-9-24-8-P1-L	P	24	11.50	8	3.60	11.30	1.70	1.50	0.40		eCA1430	a
	eN3-XF3D-0915-9026764-1-16-12-P1-L	P	16	7.50	12	4.35	8.00	2.59	2.39	0.30		eCA1434	a
	eN4-XF2W-W18-4324693-8-24-8-P1-L	P	24	11.50	8	3.60	11.30	1.77	1.57	0.40		eCA1443	a
	eN4-XF3H31-9988439-2-24-8-F1-L	F	24	11.50	8	3.58	10.98	1.10		0.40		eCA1465	a
	eN4-XF3H35-9979679-5-24-8-F1-L	F	24	11.50	8	3.58	12.18	1.10		0.40		eCA1466	a
	eN4-XF3H45-9988369-8-24-8-F1-L	F	24	11.50	8	3.58	15.18	1.10		0.40		eCA1467	a
	eN4-XF3H51-9988373-6-24-8-F1-L	F	24	11.50	8	3.58	16.98	1.10		0.40		eCA1468	a
	eN4-XF3H41-1182255-4-24-8-F1-L	F	24	11.50	8	3.58	13.98	1.10		0.40		eCA1473	a
	eC4-1000041537-CTPK001-16-12-F1-L	F	16	7.50	12	6.80	8.30	5.60		0.40		eCA1492	a
	eC4-1533254-3-24-8-F1-L	F	24	11.50	8	5.30	9.80	3.80		0.40		eCA1495	a
	eC4-1533254-1-24-8-F1-L	F	24	11.50	8	4.80	9.80	5.30		0.40		eCA1496	a
	eC4-1-1533254-5-24-8-F1-L	F	24	11.50	8	4.10	9.80	4.80		0.40		eCA1497	a
	eC4-1000041602-CTPK012-12-08-F1-L	F	12	5.50	8	5.60	4.90	3.90		0.40		eCA1501	a

Copyright © 1999-2024 ePAK International, Inc.

CARRIER TAPE

CONNECTOR(continued)

Device Type	Order Code	Style	W	F	P	AO	BO	KO	K1	T	22"	Drawing	Tool
	eC4-1000041624-CTPK044-44-24-F1-L	F	44	20.20	24	15.80	30.30	3.40		0.40		eCA1502	a
	eN4-G6L-5989374-7-24-12-F1-L	F	24	11.50	12	8.90	11.20	4.60		0.40		eCA1504	a
	eN5-G6Z-7479560-3-32-16-F1-L	F	32	14.20	16	10.30	20.60	10.00		0.50		eCA1505	a
	eC4-719D00000-56-20-P1-L	P	56	26.20	20	11.58	39.78	6.60		0.40		eCA1506	a
	eN4-99-1001-00-16-12-F1-L	F	16	7.50	12	7.40	9.40	5.20		0.40		eCA1511	a
	eC4-1000039107-CTPK012-12-08-F1-L	F	12	5.50	8	4.10	4.20	3.40		0.40		eCA1513	a
	eC2.5-506-CARLV1-01-8-4-F1-L	F	8	3.50	4	3.05	3.63	2.16		0.25		eCA1655	a
	eC3-3CP50657-12-8-F1-L	F	12	5.50	8	6.85	7.40	1.90		0.30		eCA1688	a
	eN4-99-G-23307B-12-8-F1-L	F	12	5.50	8	5.20	4.20	3.50		0.40		eCA1690	a
	eC3-4.505-12-8-F1-L	F	12	5.50	8	4.75	5.25	1.25		0.30		eCA1694	a
	eC3-4.65.2-12-8-F1-L	F	12	5.50	8	4.85	5.45	1.00		0.30		eCA1697	a
	eC3-S180-12-8-F1-L	F	12	5.50	8	3.10	5.10	1.20		0.30		eCA1698	a
	eC4-AF64-24-16-P1-L	P	24	11.50	16	8.75	8.75	6.35	3.00	0.40		eCA1699	a
	eC2.5-CTM302-8-4-F1-L	F	8	3.50	4	2.70	2.70	1.75		0.25		eCA1705	a
	eN4-99-G-24228-24-16-F1-L	F	24	11.50	16	10.50	12.10	4.30		0.40		eCA1714	a
	eN4-99-G-24285-24-16-F1-L	F	24	11.50	16	10.20	11.80	4.30		0.40		eCA1717	a
	eN4-99-1083-01-16-12-F1-L	F	16	7.50	12	6.30	6.30	5.10		0.40		eCA1721	a
	eC2-1.55X1.5X1.0-8-4-F1-L	F	8	3.50	4	1.60	1.65	1.30		0.20		eCA1724	a
	eN4-D2LS-2267326-7-24-8-P1-L	P	24	11.50	8	5.20	11.60	4.70	3.85	0.40		eCA1726	a
	eC3-MSC-7392-16-12-P1-L	P	16	7.50	12	9.27	9.27	1.50	1.20	0.30		eCA1734	a
	eC3-MSC-5912-12-8-P1-L	P	12	5.50	8	6.90	5.40	1.50	1.20	0.30		eCA1735	a

Copyright © 1999-2024 ePAK International, Inc.

CONNECTOR(continued)

	eN4-99-1082-01-24-16-F1-L	F	24	11.50	16	12.30	12.30	3.60		0.40		eCA1736	a
	eN4-XF2B-31P-24-12-P1-L	P	24	11.50	12	5.91	11.40	2.40	2.20	0.40		eCA1740	a
	eN4-XF2B-33P-24-12-P1-L	P	24	11.50	12	5.91	12.00	2.40	2.20	0.40		eCA1741	a
	eN4-XF2B-45P-24-12-P1-L	P	24	11.50	12	5.91	15.60	2.40	2.20	0.40		eCA1742	a
	eN4-XF2B-51P-24-12-P1-L	P	24	11.50	12	5.91	17.40	2.40	2.20	0.40		eCA1743	a
	eC3-506-CARS6P-01-12-8-P1-L	P	12	5.50	8	4.00	3.70	2.20		0.30		eCA1744	a
	eC2.5-506-CARSTP-01-8-4-F1-L	F	8	3.50	4	2.20	3.30	1.50		0.25		eCA1745	a
	eC2-3528-8-4-F2-L	F2	8	3.50	4	3.05	3.75	1.10		0.20		eCA1746	a
	eC3-485-CTM301-77-8-4-F1-L	F	8	3.50	4	3.00	3.00	2.70		0.30		eCA1747	a
	eN4-XF2B-27P-24-12-P1-L	P	24	11.50	12	5.91	10.20	2.40	2.20	0.40		eCA1754	a
	eN4-XF2B-35P-24-12-P1-L	P	24	11.50	12	5.91	12.60	2.40	2.20	0.40		eCA1755	a
	eN4-XF2B-21P-16-12-P1-L	P	16	7.50	12	5.91	8.40	2.40	2.20	0.40		eCA1756	a
	eC3-EQ/EQG 14.0X14.0X1.4-32-24-P1-L	P	32	14.20	24	17.50	17.50	1.88	1.58	0.30		eCA1768	a
	eN4-99-G-24691-24-16-P1-L	P	24	11.50	16	11.65	13.60	4.00		0.40		eCA1771	a
	eN5-99-1074-01-24-16-F1-L	F	24	11.50	16	12.90	12.90	8.00		0.50		eCA1779	a
	eN5-99-1078-01-24-16-F1-L	F	24	11.50	16	12.60	12.60	8.60		0.50		eCA1780	a
	eC2.5-2520-1.3CN-8-4-F1-L	F	8	3.50	4	2.20	2.75	1.30		0.25		eCA1782	a
	eC3-P8-282-P16-12-8-F1-L	F	12	5.50	8	6.55	5.35	2.10		0.30		eCA1783	a
	eC3-P8-169-P24-16-12-P1-L	P	16	7.50	12	7.00	8.20	1.55	1.30	0.30		eCA1784	a
	eC3-P8-302-N16-12-8-F1-L	F	12	5.50	8	3.35	3.35	1.20		0.30		eCA1787	a
	eC3-P8-347-N20-12-8-F1-L	F	12	5.50	8	4.35	4.35	1.10		0.30		eCA1788	a
	eC3-P8-248-P20-16-8-F1-L	F	16	7.50	8	6.50	9.50	2.10		0.30		eCA1789	a
	eC3-P8-277-D48-16-8-F1-L	F	16	7.50	8	6.55	10.38	2.10		0.30		eCA1790	a

 Copyright © 1999-2024 ePAK International, Inc.

CONNECTOR(continued)

	eC5-TRP2F-72-32-F1-L	F	72	34.20	32	23.80	48.30	9.50		0.50		eCA1792	a
	eC3-P8-321-P28-24-12-P1-L	P	24	11.50	12	8.90	10.60	2.30	2.00	0.30		eCA1793	a
	eC3-P8-330-P48-24-12-P1-L	P	24	11.50	12	7.10	10.10	1.30	1.50	0.30		eCA1794	a
	eC2.5-P8-293-PG8-12-8-P1-L	P	12	5.50	8	6.90	3.45	1.50	1.15	0.25		eCA1803	a
	eC3-P8-320-P20-16-12-P1-L	P	16	7.50	12	8.60	7.60	2.30	2.00	0.30		eCA1804	a
	eN4-99-G-25108-24-20-F1-L	F	24	11.50	20	15.00	15.00	4.00		0.40		eCA1805	a

 Copyright © 1999-2024 ePAK International, Inc.

CARRIER TAPE

COIL

Device Type	Order Code	Style	W	F	P	AO	BO	KO	K1	T	22"	Drawing	Tool
Coil	eN5-D195H00-16-8-P1	P	16	7.5	8	6.4	7.4	3.4	2.7	1		eCA0002	a
Coil	eN5-D195E00-16-8-P1	P	16	7.5	8	5.7	7.4	2.4	1.7	1		eCA0003	a
Coil	eN4-BLS-12-8-F1	F	12	5.5	8	4.6	5.8	3.2	N/A	0		eCA0004	a
Coil	eN4-7MDCH2-16-12-F1	F	16	7.5	12	9.2	7.2	4.5	N/A	0		eCA0005	a
Coil	eN4-950176-24-8-P1	P	24	12	8	5.9	12	2.3	1.6	0		eCA0007	a
Coil	eC5-SDS0604-16-12-F1	F	16	7.5	12	6.9	6.9	5.1	N/A	1		eCA0021	a
Coil	eC5-SD1208-24-20-P1	P	24	12	20	13.1	13.1	8.3	7.9	1		eCA0022	a
Coil	eN4-4BLS2-12-8-F1	F	12	5.5	8	5.4	5.8	4.5	N/A	0		eCA0039	a
Coil	eC4-SDS0906-24-16-F-L	F	24	12	16	12.9	10.4	6.5	N/A	0		eCA0055	a
Coil	eN4-TER-14.5-24-20-F1-L	F	24	12	20	15.5	17	7.3	N/A	0		eCA0061	a
Coil	eN4-TER-11-24-16-F1-L	F	24	12	16	13.3	11.8	6.2	N/A	0		eCA0067	a
Coil	eC5-SE1106-24-16-P1-L	P	24	12	16	13.7	13.6	6.6	N/A	1		eCA0106	a
Coil	eC4-SDR1006-24-12-P1-L	P	24	12	12	10.5	10.5	5.9	4.8	0		eCA0111	a
Coil	eC3-TPK000108-24-12-P1-L	P	24	12	12	8.9	12.1	3	N/A	0		eCA0113	a
Coil	eC4-TPK003508-44-16-F1-L	F	44	20	16	10	22	4.8	N/A	0		eCA0115	a
Coil	eC4-TPK003504-24-16-F1-L	F	24	12	16	10	12.9	4.8	N/A	0		eCA0116	a
Coil	eN4-SDS1005-24-16-F1-L	F	24	12	16	10.4	13.2	5.3	N/A	0		eCA0123	a
Coil	eN4-5MDC-12-8-F1-L	F	12	5.5	8	5.5	5.9	5.2	N/A	0		eCA0124	a
Coil	eN5-2225-00680-16-8-P1-L	P	16	7.5	8	4.6	8.1	5	N/A	1		eCA0132	a
Coil	eN5-2225-01480-24-12-P1-L	P	24	12	12	3.4	11.2	5.8	4.8	1		eCA0133	a
Coil	eN5-912051-1-16-12-P1-L	P	16	7.5	12	5.9	8	5.5	4.3	1		eCA0149	a
Coil	eN5-912051-2-16-12-P1-L	P	16	7.5	12	5.9	9.25	5.5	4.3	1		eCA0150	a
Coil	eN5-912051-4-16-12-P1-L	P	16	7.5	12	5.9	10.5	5.5	4.3	1		eCA0151	a
Coil	eN5-912055-1-16-12-P1-L	P	16	7.5	12	5.9	5.5	5.5	4.3	1		eCA0153	a

Copyright © 1999-2024 ePAK International, Inc.

CARRIER TAPE

COIL(continued)

Device Type	Order Code	Style	W	F	P	AO	BO	KO	K1	T	22"	Drawing	Tool
Coil	eC3-SSO403-12-8-F1-L	F	12	5.5	8	4.4	6.75	2.9	N/A	0		eCA0154	a
Coil	eN2.5-075-09811-8-4-F1-L	F	8	3.5	4	1.12	1.73	1	N/A	0		eCA0156	a
Coil	eC4-TP-K-0034-0-32-16-F1-L	F	32	14	16	11.2	12.9	4.8	N/A	0		eCA0164	a
Coil	eN5-912055-4-24-12-P1-L	P	24	12	12	5.9	11.8	7	5.8	1		eCA0208	a
Coil	eN5-912061-6-24-12-P1-L	P	24	12	12	5.5	9.25	7.4	6.3	1		eCA0210	a
Coil	eN4-TB055-0400-44-36-P1-L	P	44	20	36	28	33	3.4	N/A	0		eCA0212	a
Coil	eN4-TB064-0400-44-36-P1-L	P	44	20	36	31	30.4	5	N/A	0		eCA0213	a
Coil	eC4-912096-2-56-52-P1-L	P	56	26	52	43.8	36.3	5.1	N/A	0		eCA0214	a
Coil	eC3-S044-44-24-P1-L	P	44	20	24	16.6	28.9	3.5	2.7	0		eCA0215	a
Coil	eC3-SO44-44-24-P1-L	P	44	20	24	16.6	28.9	3.5	2.7	0		eCA0215	a
Coil	eN5-623237-1-24-12-P1-L	P	24	12	12	6.8	10.2	7.1	6.3	1		eCA0220	a
Coil	eC3-TO-263-24-12-P1-L	P	24	12	12	10.7	16.7	5	4.8	0		eCA0224	a
Coil	eC3-TO-263-24-12-P1-L	P	24	12	12	10.7	16.7	5	4.8	0		eCA0224	a
Coil	eC3-DPAK-16-8-P1-L	P	16	7.5	8	6.9	10.5	2.9	2.6	0		eCA0225	a
Coil	eC3-DPAK-16-8-P1-L	P	16	7.5	8	6.9	10.5	2.9	2.6	0		eCA0225	a
Coil	eC3-MFP16P-16-8-F1-L	F	16	7.5	8	6.9	8.9	2.1	N/A	0		eCA0238	a
Coil	eN5-Z070672-00-44-20-P1-L	P	44	N/A	20	6.5	20.5	8.2	7.6	1		eCA0241	a
Coil	eN5-TET32K-32-24-F1-L	F	32	14	24	13.4	18	13	N/A	1		eCA0246	a
Coil	eN3-D0303-16-8-P1-L	P	16	7.5	8	6	9	2	N/A	0		eCA0248	a
Coil	eN4-TB028-0400-56-48-P1-L	P	56	26	48	20.7	35.2	5.8	N/A	0		eCA0249	a
Coil	eC4-912096-5-56-56-P1-L	P	56	26	56	43.8	36.3	5.1	N/A	0		eCA0251	a
Coil	eN4-TB100-0400-32-28-P1-L	P	32	14	28	22	19	5.4	4.8	0		eCA0252	a
Coil	eN4-623244-1-44-12-P1-L	P	44	20	12	7.86	29	5.1	N/A	0		eCA0256	a
Coil	eN5-623243-1-44-16-P1-L	P	44	20	16	6.95	26.8	13	N/A	1		eCA0257	a

Copyright © 1999-2024 ePAK International, Inc.

CARRIER TAPE

COIL(continued)

Device Type	Order Code	Style	W	F	P	AO	BO	KO	K1	T	22"	Drawing	Tool
Coil	eN4-912095-4-44-20-P1-L	P	44	20	20	14.7	25.3	9	7.7	0		eCA0258	a
Coil	eN4-623238-1-56-12-P1-L	P	56	26	12	7.9	43.3	6.4	N/A	0		eCA0259	a
Coil	eC3-XCT05A-24-16-P1-L	P	24	12	16	13	14.4	3.8	N/A	0		eCA0267	a
Coil	eN4-TB103-0400-56-32-P1-L	P	56	26	32	27	34.4	8.1	N/A	0		eCA0268	a
Coil	eN4-912097-1-72-12-P1-L	P	72	34	12	6.5	49	5.1	N/A	0		eCA0274	a
Coil	eN4-912095-5-44-12-P1-L	P	44	20	12	6.5	25	5.1	N/A	0		eCA0275	a
Coil	eC4-ACM6022B-T01B-24-20-P1-L	P	24	12	20	8.3	8.3	6.5	4.4	0		eCA0276	a
Coil	eC4-DVC-24-12-F1-L	F	24	12	12	9.6	14.7	5.6	N/A	0		eCA0279	a
Coil	eN4-912094-4-32-12-P1-L	P	32	14	12	6.5	22	7.1	N/A	0		eCA0280	a
Coil	eN4-912094-5-32-12-P1-L	P	32	14	12	6.5	22	4.6	N/A	0		eCA0281	a
Coil	eN5-S9-20063E-00-16-8-F1-L	F	16	7.5	8	3.6	5.6	5.8	N/A	1		eCA0285	a
Coil	eC5-96-POCK-0080-24-12-F1-L	F	24	12	12	7	14.7	5.5	N/A	1		eCA0286	a
Coil	eC4-F408-OA-SMLF-38-24-8-F1-L	F	24	12	8	3.6	10.6	3.8	N/A	0		eCA0298	a
Coil	eN4-7-0912073-5-24-12-P1-L	P	24	12	12	6.8	16.3	4.1	3.3	0		eCA0309	a
Coil	eC5-96-POCK-0073-44-20-F1-L	F	44	20	20	15.4	22.5	7.8	N/A	1		eCA0317	a
Coil	eC3-TO-263-24-12-P2-L	P	24	12	12	10.5	16.3	4.9	4.7	0		eCA0335	a
Coil	eN3-0-912094-7-32-8-F1-L	F	32	14	8	4.2	18.5	2	N/A	0		eCA0338	a
Coil	eN4-TS-1112EM-16-8-PI-L	P	16	7.5	8	5.8	8.2	4.7	3.7	0		eCA0339	a
Coil	eN3-0-912092-3-12-8-F1-L	F	12	5.5	8	4.2	6	1.7	N/A	0		eCA0340	a
Coil	eC4-623269-1-56-8-P1-L	P	56	26	8	3.55	6.1	3	N/A	0		eCA0343	a
Coil	eC5-96-POCK-0085-16-12-FI-L	F	16	7.5	12	6.4	8.3	4.3	N/A	1		eCA0346	a
Coil	eC4-GKT8.870.018-24-16-F1-L	F	24	12	16	8.9	8.9	3.6	N/A	0		eCA0351	a
Coil	eC5-96-POCK-0086-44-24-P1-L	P	44	20	24	14.8	27.8	6.6	6.1	1		eCA0352	a
Coil	eC4-MPT15-24-24-P1-L	P	24	12	24	16.1	16.1	7.8	6.9	0		eCA0359	a

Copyright © 1999-2024 ePAK International, Inc.

COIL(continued)

Device Type	Order Code	Style	W	F	P	AO	BO	KO	K1	T	22"	Drawing	Tool
Coil	eN4-950252-56-44-P1-L	P	56	26	44	36.5	35.2	4.2	N/A	0		eCA0379	a
Coil	eN3-3S-960132-7-12-8-F1-L	F	12	5.7	8	5	7.2	2.9	N/A	0		eCA0383	a
Coil	eN4-99-0772-24-16-F1-L	F	24	12	16	10.5	10.5	6.9	N/A	0		eCA0436	a
Coil	eN4-99-0740-24-16-F1-L	F	24	12	16	12.9	12.9	6.9	N/A	0		eCA0437	a
Coil	eC3-TO-263-24-16-P3-L	P	24	12	16	10.6	16.5	4.9	4.7	0		eCA0451	a
Coil	eN4-99-0795-01-24-8-F1-L	F	24	12	8	4.3	12.6	3.6	N/A	0		eCA0474	a
Coil	eC3-W202-103-16-12-P1-L	P	16	7.5	12	10.2	6.9	2.8	2.6	0		eCA0489	a
Coil	eC3-W202-105-16-8-P1-L	P	16	7.5	8	6.9	10.5	2.7	2.5	0		eCA0493	a
Coil	eN4-99-0440-12-8-F1-L	F	12	5.5	8	5.5	5.4	3.6	N/A	0		eCA0495	a
Coil	eN4-99-0417-12-8-F1-L	F	12	5.5	8	5.4	4.4	3.5	N/A	0		eCA0497	a
Coil	eN3-99-0654-12-12-F1-I	F	12	12	12	6.2	6.3	3.3	N/A	0		eCA0498	a
Coil	eN4-99-0456-16-12-F1-I	F	16	7.5	12	7.8	7.8	5.4	N/A	0		eCA0499	a
Coil	eN4-99-0457-16-12-F1-L	F	16	7.5	12	7.8	7.8	6.4	N/A	0		eCA0500	a
Coil	eN4-99-0467-16-12-F1-L	F	16	12	12	6.9	6.4	4.6	N/A	0		eCA0501	a
Coil	eN4-99-0711-01-12-12-F1-L	F	12	5.5	12	6.2	6.3	3.8	N/A	0		eCA0502	a
Coil	eN4-99-0579-24-16-F1-L	F	24	12	16	9.8	11.4	5.4	N/A	0		eCA0503	a
Coil	eN4-99-0677-24-16-F1-L	F	24	16	16	12.4	13	4.9	N/A	0		eCA0504	a
Coil	eC4-1000015654-44-24-F1-L	F	44	20	24	17.9	26.4	5	N/A	0		eCA0513	a

 Copyright © 1999-2024 ePAK International, Inc.

COIL(continued)

Device Type	Order Code	Style	W	F	P	AO	BO	KO	K1	T	22"	Drawing	Tool
Coil	eN3-0793-01-12-8-F1-L	F	12	5.5	8	4.9	4.9	1.4	N/A	0		eCA0521	a
Coil	eN3-6-68-0039-00-12-8-F1-L	F	12	5.5	8	3.5	3.8	2.4	N/A	0		eCA0541	a
Coil	eN4-99-0708-01-12-8-F1-L	F	12	5.5	8	5.3	5.3	2.4	N/A	0		eCA0597	a
Coil	eN4-99-0709-01-12-8-F1-L	F	12	5.5	8	5.3	5.3	3.4	N/A	0		eCA0598	a
Coil	eN4-99-0649-01-12-8-F1-L	F	12	5.5	8	5.5	5.4	2.6	N/A	0		eCA0599	a
Coil	eN4-tb138-0400-32-28-P1-L	P	32	14	28	22	19	5.6	5.1	0		eCA0600	a
Coil	eC3-TK-0021-12-4-F1-L	F	12	5.5	4	2.3	3.2	1.6	N/A	0		eCA0601	a
Coil	eN4-99-0754-01-12-8-F1-L	F	12	5.5	8	5.6	6	2.2	N/A	0		eCA0602	a
Coil	eN4-99-0788-01-12-8-F1-L	F	12	5.5	8	5.6	6	2	N/A	0		eCA0603	a
Coil	eN3-SB1R95F2R14B-16-8-F1-L	F	16	7.5	8	4.7	9.5	2.2	N/A	0		eCA0607	a
Coil	eN4-99-G0015-24-8-F1-L	F	24	11.50	8	3.70	12	3.10	N/A	0.40		eCA0613	a
Coil	eN3-99-0863-01-12-8-F1-L	F	12	5.50	8	4.25	4.25	2	N/A	0.30		eCA0620	a
Coil	eN3-99-0864-01-12-8-F1-L	F	12	5.50	8	4.25	4.25	2.20	N/A	0.30		eCA0621	a
Coil	eC2-441037-00-8-4-F1-L	F	8	3.5	4	0.93	1.75	0.9	N/A	0		eCA0637	a
CSRW1302	eC3-CSRW1302-24-20-P1-L	P	24	11.50	20	12.80	12.80	2.40	1.60	0.30		eCA0882	a
CDJL7ERS	eC5-CDJL7ERS-24-16-P1-L	P	24	11.50	16	8.56	9.60	7.15	6.35	0.50		eCA0896	a

 Copyright © 1999-2024 ePAK International, Inc.

CARRIER TAPE

COIL(continued)

Device Type	Order Code	Style	W	F	P	AO	BO	KO	K1	T	22"	Drawing	Tool
99-0887-01	eN3-99-0887-01-12-8-F1-L	F	12	5.50	8	3.25	3.25	2.00	N/A	0.30		eCA1004	a
99-0888-01	eN3-99-0888-01-12-8-F1-L	F	12	5.50	8	3.25	3.25	2.20	N/A	0.30		eCA1005	a
99-0829-01	eN4-99-0829-01-24-20-F1-L	F	24	11.50	20	16.40	16.40	4.10	N/A	0.40		eCA1038	a
99-0301-02	eN4-99-0301-02-12-8-F1-L	F	12	5.50	8	5.20	6.40	4.90	N/A	0.40		eCA1040	a
99-0299-02	eN4-99-0299-02-16-8-F1-L	F	16	7.50	8	6.40	10.10	4.90	N/A	0.40		eCA1070	a
99-0300-02	eN4-99-0300-02-24-8-F1-L	F	24	11.50	8	6.40	14.75	4.90	N/A	0.40		eCA1071	a
99-0909-00	eC4-99-0909-00-24-16-F1-L	F	24	11.50	16	12.90	14.70	6.30	N/A	0.40		eCA1080	a
99-0926-00	eC4-99-0926-00-24-16-F1-L	F	24	11.50	16	12.90	14.70	5.30	N/A	0.40		eCA1081	a
99-0933-01	eN3-99-0933-01-12-8-F1-L	F	12	5.50	8	4.75	4.95	1.60		0.30		eCA1226	a
99-0910-01	eN3-99-0910-01-12-8-F1-L	F	12	5.50	8	3.05	3.25	1.40		0.30		eCA1227	a

Copyright © 1999-2024 ePAK International, Inc.

CARRIER TAPE

CAPACITOR

Device Type	Order Code	Style	W	F	P	AO	BO	KO	K1	T	22"	Drawing	Tool
010x10.5L	eN4-010x10.5L-24-16-F1-L	F	24	11.50	16	10.70	11.90	11	N/A	0.40		eCA0118	a
04X5.3L	eN4-04X5.3L-12-8-F1-L	F	12	5.50	8	4.70	6.10	5.70	N/A	0.40		eCA0112	a
05x5.3L	eN4-05X5.3L-12-8-F1-L	F	24	11.50	16	8.70	8.90	11	N/A	0.40		eCA0121	a
06.3X7.7L	eN4-06.3X7.7L-16-12-F1-L	F	16	7.50	12	7	7	8.30	N/A	0.40		eCA0117	a
08x10.5L	eN4-08X10.5L-24-16-F1-L	F	24	11.50	16	8.70	8.90	11	N/A	0.40		eCA0119	a

OTHERS

Device Type	Order Code	Style	W	F	P	AO	BO	KO	K1	T	22"	Drawing	Tool
Custom	eC4-NEW-SLIDING-SIM-24-24-P1-L	P	24	11.50	24	14.20	16.60	3.70	3.40	0.40		eCA0664	a
Custom	eC3-Cameraring-24-20-p1-l	p	24	11.50	20	13	13	1.60	1.20	0.30		eCA0689	a
Custom	eC3-SIDEKEYS-44-12-P1-L	P	44	20.20	12	3.70	25.70	2.60	1.90	0.30		eCA0690	a
Custom	eC3-JOYSTICK-KNOB-24-20-P1-L	P	24	11.50	20	10	10	4.10	2.70	0.30		eCA0691	a
Custom	EN3-PT-1630-SK08-HTF-16-8-P1-L	P	16	7.50	8	4	8.90	2.70	2	0.30		eCA0648	a
Custom	eC4-DIS68489-16-12-P1-L	P	16	7.50	12	7.70	7.70	5.55	4.10	0.40		eCA0784	a
SR-20892	eC4-SR-20892-56-56-F1-L	F	56	26.20	56	41	38.40	5.70	N/A	0.40		eCA1008	a
SR-20946	eC4-SR20946-56-56-F1-L	F	56	26.20	56	37.40	39	5.60	N/A	0.40		eCA1055	a
SR-20947	eC4-SR-20947-16-12-P1-L	P	16	7.50	12	4.10	8.20	5.10	3.70	0.40		eCA1026	a
MOSP 10 LD	EC3-MSOP 10LD-12-8-P1-L	P	12	5.50	8	5.40	3.40	1.40	1.10	0.30		eCA1498	

Copyright © 1999-2024 ePAK International, Inc.

CARRIER TAPE

SWITCH

Device Type	Order Code	Style	W	F	P	AO	BO	KO	K1	T	22"	Drawing	Tool
Switch	eC4-TP-K-0047-4P-24-16-F1	F	24	11.50	16	10	12.90	5.80	N/A	0.40		eCA0013	a
Switch	eC4-TP-K-0047-8P-44-16-F1	F	44	20.20	16	10	22.70	5.80	N/A	0.40		eCA0014	a
Switch	eC3-TP-K-000104-16-12-P1-L	P	16	7.50	12	8.90	7	3	N/A	0.30		eCA0180	a

SPEAKER

Device Type	Order Code	Style	W	F	P	AO	BO	KO	K1	T	22"	Drawing	Tool
Speaker	eC4-DET801B-24-12-P1-L	P	24	11.50	12	9.20	9.20	4	N/A	0.40		eCA0162	a
Speaker	eC4-DET801C&G-24-12-F1-L	F	24	11.50	12	8.80	8.80	3.80	N/A	0.40		eCA0080	a
Speaker	eC4-DET801D-24-12-P1	P	24	11.50	12	9.20	9.20	4.50	N/A	0.40		eCA0015	a
Speaker	eC4-DET801E-24-16-P1-L	P	24	11.50	16	11	9	4.30	3.40	0.40		eCA0081	a
Speaker	eC4-DET901C-24-16-P1-L	P	24	11.50	16	11.50	11.50	4.20	N/A	0.40		eCA0108	a
Speaker	eC4-DET901D-24-16-F1-L	F	24	11.50	16	11.05	13.10	4	N/A	0.40		eCA0211	a
Speaker	eC4-MET1402-24-24-P1	P	24	11.50	24	13.20	13.10	9.70	10.50	0.40		eCA0031	a
Speaker	eC4-MPT13-24-24-F1-L	F	24	11.50	24	13	17	3.50		0.40		eCA0752	a

 Copyright © 1999-2024 ePAK International, Inc.

CARRIER TAPE

MCM

Device Type	Order Code	Style	W	F	P	AO	BO	KO	K1	T	22"	Drawing	Tool
MCM3x4	eC3-MCM3x4-12-8-F1-L	F	12	5.50	8	3.30	4.30	1.40	N/A	0.30		eCA1411	a
MCM0306	eC3-MCM0306-12-8-F1-L	F	12	5.50	8	3.35	5.35	1.60	N/A	0.30		eCA1160	a
MCM3X8	eC3-MCM3X8-16-8-F1-L	F	16	7.50	8	3.35	8.38	1.40	N/A	0.30		eCA1331	a
MCM3.5X3.5	eC3-MCM3.5X3.5-12-8-F1-L	F	12	5.50	8	3.80	3.80	1.50		0.30		eCA1280	a
MCM3.5x4.5	eC3-MCM3.5x4.5-12-8-F1-L	F	12	5.50	8	3.85	4.85	1.30		0.30		eCA1557	a
MCM3.65x4	eC3-MCM3.6504-12-8-F1-L	F	12	5.50	8	3.85	4.20	1.00	N/A	0.30		eCA1773	a
MCM3.75x5.5	eC3-MCM3.755.5-12-8-F1-L	F	12	5.50	8	4.00	5.75	1.00	N/A	0.30		eCA1796	a
MCM4.1x6.3	eC3-MCM4.16.3-12-8-F1-L	F	12	5.50	8	4.35	6.55	1.15	N/A	0.30		eCA1763	a
MCM4.25x5.5	eC3-MCM4.255.5-12-8-F1-L	F	12	5.50	8	4.50	5.75	1.00	N/A	0.30		eCA1797	a
MCM4.3x5.3	eC3-MCM4.35.3-12-8-F1-L	F	12	5.50	8	4.60	5.60	1.20	N/A	0.30		eCA1769	a
MCM4.3x5.3	eC3-MCM4.35.3-12-8-F1-L	F	12	5.50	8	4.60	5.60	1.20	N/A	0.30		eCA1769	a
MCM4.5x6.15	eC3-MCM4.56.15-16-8-F1-L	F	16	7.50	8	4.80	6.45	1.15	N/A	0.30		eCA1757	a
MCM4.8x6.7	eC3-MCM4.8X6.7-16-8-F1-L	F	16	7.50	8	5.05	6.95	1.20	N/A	0.30		eCA1719	a
MCM5x6x1.5	eC3-MCM5X6X1.5-12-8-F1-L	F	12	5.50	8	5.35	6.35	2	N/A	0.30		eCA0811	a
MCM5x7	eC3-MCM5X7-16-8-F1-L	F	16	7.50	8	5.35	7.35	1.25		0.30		ECA1463	a
MCM5X8	eC3-MCM5X8-16-8-F1-L	F	16	7.50	8	5.3	8.3	1.80	N/A	0.30		eCA0563	a
MCM5.3x5.5	eC3-MCM5.35.5-12-8-F1-L	F	12	5.50	8	5.50	5.70	1.10	N/A	0.30		eCA1772	a
MCM5.5x5	eC3-MCM5.5x5.0-12-8-F1-L	F	12	5.50	8	5.85	5.35	1.30		0.30		eCA1552	a
MCM5.5x5	eC3-MCM5.5x5.0-12-8-F2-L	F	12	5.50	8	5.85	5.35	1.80		0.30		eCA1558	a
MCM5.5x8.2	eC3-MCM5.58.2-16-8-F1-L	F	16	7.50	8	5.70	8.40	0.85	N/A	0.30		eCA1774	a
MCM5.6x8.15	eC3-MCM5.6X8.15-16-8-F1-L	F	16	7.50	8	5.85	8.40	1.20	N/A	0.30		eCA1720	a

Copyright © 1999-2024 ePAK International, Inc.

CARRIER TAPE

MCM (continued)

Device Type	Order Code	Style	W	F	P	AO	BO	KO	K1	T	22"	Drawing	Tool
MCM6X6	eC3-MCM0606-12-8-F3-L	F	12	5.50	8	6.35	6.35	1.59	N/A	0.30		eCA1350	a
MCM6X8	eC3-MCM0608-16-8-F1-L	F	16	7.50	8	6.35	8.35	1.80	N/A	0.30		eCA0759	a
MCM6X11	eC3-MCM6X11-24-12-F1-L	F	24	11.50	12	6.35	11.35	2	N/A	0.30		eCA0858	a
MCM7X11	eC3-MCM7X11-24-12-F1-L	F	24	11.50	12	7.35	11.35	1.90	N/A	0.30		eCA1068	a
MCM7.5X7.5	eC3-MCM7.5X7.5-16-12-F1-L	F	16	7.50	12	7.85	7.85	1.40	N/A	0.30		eCA1330	a
MCM8.4x8.4	eC3-MCM8.48.4-16-12-F1-L	F	16.00	7.50	12.00	8.89	8.89	2.14	N/A	0.30		eCA1704	a
MCM8.7x6.7	eC3-MCM8.7x6.7-16-12-F1-L	F	16	7.50	12	7.10	9.10	1.50	N/A	0.30		eCA1406	a
MCM9X10	eC3-MCM9X10-24-12-F1-L	F	24	11.50	12	9.35	10.35	1.80	N/A	0.30		eCA0483	a
MCM9x12	eC3-MCM0912-24-12-F2-L	F	24	11.50	12	9.30	12.30	2.00		0.30		ECA1472	a
MCM9.6X10.6	eC3-MCM9.8X10.6-24-16-F1-L	F	24	11.50	16	10.15	10.95	2	N/A	0.30		eCA1105	a
MCM9.8X10.6	eC3-MCM9.8X10.6-24-12-F1-L	F	24	11.50	12	10.15	10.95	2.00	N/A	0.30		eCA0933	a
MCM10X8	eC3-MCM10X8-16-12-F1-L	F	16	12	12	8.35	10.35	2	N/A	0.30		eCA0512	a
MCM10X11	eC3-MCM10X11-24-16-F1-L	F	24	11.50	16	10.35	11.35	2	N/A	0.30		eCA1053	a
MCM10X14	eC3-MCM10X14-24-12-F1-L	F	24	11.50	12	10.35	14.35	2	N/A	0.30		eCA0484	a
MCM10x14	eC3-MCM10X14-24-12-F2-L	F	24	11.50	12	10.35	14.35	1.30		0.30		eCA1572	a
MCM11.4X15	eC3-MCM11.4X15-24-16-F1-L	F	24	11.50	16	11.70	15.30	2.90	N/A	0.30		eCA1344	a
MCM9.8X10.6	eC3-MCM9.8X10.6-24-12-F1-L	F	24	11.50	12	10.15	10.95	2.00	N/A	0.30		eCA0933	a
MCM10X6	eC3-MCM10X6-16-8-F1-L	F	16	11.50	8	6.35	10.35	1.35		0.30		eCA1279	

Copyright © 1999-2024 ePAK International, Inc.

Carrier Tape
Part Number System

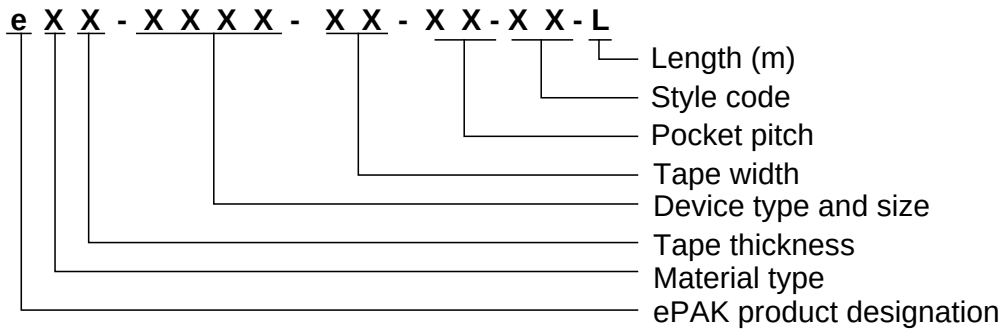

 Copyright © 1999-2024 ePAK International, Inc.

COVER TAPE

ePAK COVER TAPE FAMILY-SELECTION GUIDE

ePAK Code	Seal Method	Length	Thickness	Material	Haze	Lum Trans	SR
S1	Heat	300m	0.056mm	M/PET	30%	91%	10e6-10e12
D1	Heat	200m	0.075mm	PE/PET	23%	90%	10e6-10e12
A1	Pressure	500m	0.045mm	PE	2%	85%	10e5-10e12

S1 SERIES
HEAT SEALED

Carrier Width	Order Code	Cover Width	Std Length
8	eH56-5.30-300-S1	5.30	300
12	eH56-9.20-300-S1	9.20	300
16	eH56-13.30-300-S1	13.30	300
24	eH56-21.30-300-S1	21	300
32	eH56-25.50-300-S1	25.50	300
44	eH56-37.50-300-S1	37.50	300
56	eH56-49.50-300-S1	49.50	300

Cover Tape
Part Number System

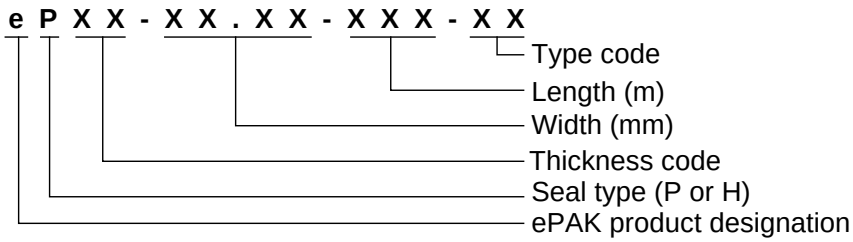

Copyright © 1999-2024 ePAK International, Inc.

COVER TAPE

D1 SERIES
HEAT SEALED

Carrier Width	Order Code	Cover Width	Std Length
8	eH75-5.25-200-D1	5.25	200
12	eH75-9.20-200-D1	9.20	200
12	eH75-9.30-200-D1	9.30	200
12	eH75-9.50-200-D1	9.50	200
16	eH75-13.30-200-D1	13.30	200
16	eH75-13.50-200-D1	13.50	200
24	eH75-21-200-D1	21	200
24	eH75-21.50-200-D1	21.50	200
32	eH75-25.50-200-D1	25.50	200
44	eH75-37.50-200-D1	37.50	200
56	eH75-49.50-200-D1	49.50	200
72	eH75-65.40-200-D1	65.40	200

A1 SERIES
PRESSURE SENSITIVE

Carrier Width	Order Code	Cover Width	Std Length
8	eP45-5.30-200-A1	5.30	200
12	eP45-9.30-500-A1	9.30	500
16	eP45-13.30-500-A1	13.30	500
24	eP45-21.30-500-A1	21.30	500
32	eP45-25.30-500-A1	25.30	500
44	eP45-37.30-500-A1	37.50	500
56	eP45-50.30-500-A1	50	500

Copyright © 1999-2024 ePAK International, Inc.

TAPE PERFORMANCE

ePAK S1 Cover Tape on ePAK SOIC 8 Carrier Tape

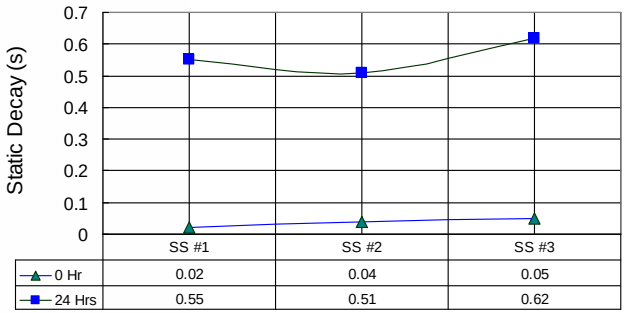

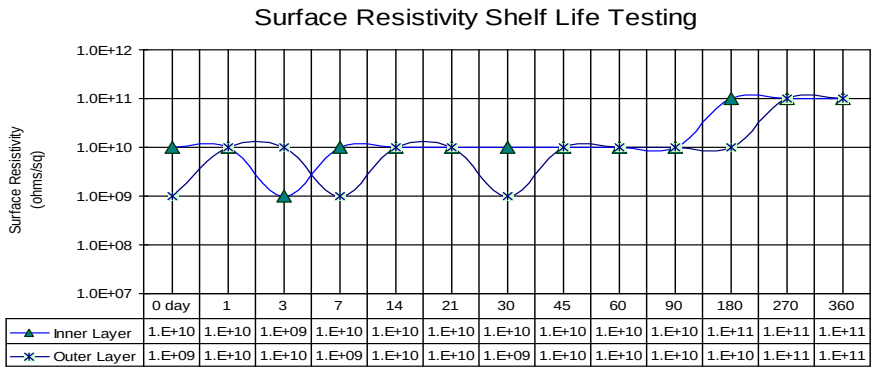

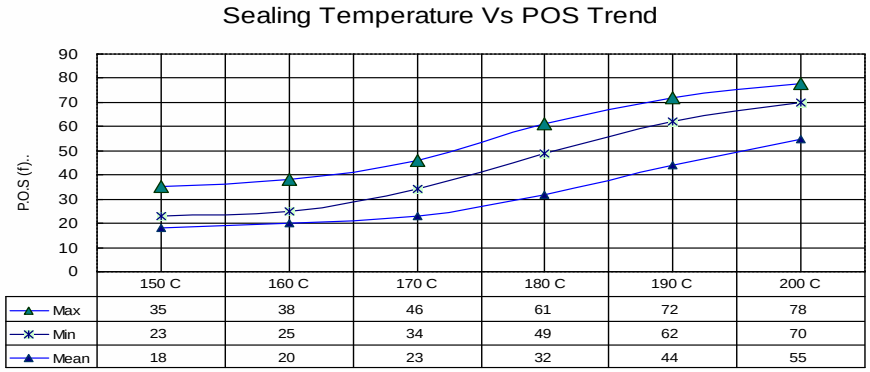

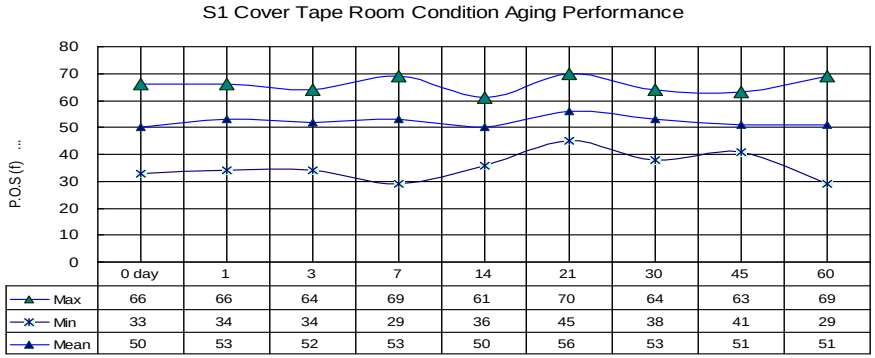

TEST CONDITIONS

Carrier Tape	:eC3-SOIC08-12-8-P2
Cover Tape	:eH56-9.2-300-S1
Sealing Machine	:Systemation MT-30 with Reciprocating Mode
Sealing Pressure	:40Psi with 0.4 second sealing Time
Sealing Temperature	:160°C (for Aging Performance test)
Sealing Shoe	:0.018"with 7.5mm inner width
Peel Strength Tester	:GPDPBFT856

For Static Decay test:	23°C,12%perEIA-541
For S/R Shelf test:	Storage conditions 25°C,65%RH
Typical lab data shown	

 Copyright © 1999-2024 ePAK International, Inc.

13 INCH REELS

7 INCH HUB “D” STYLE-2-PC LOCKING

Tape Width	Dia mm	Hub mm	Left Half Order Code	Right Half Order Code	Assembled Reel Order Code	Standard Packing Quantity
8	330	178	13/07-04-1-x	13/07-04-1-x	T08-13/07-D1-x	
12	330	178	13/07-04-1-x	13/07-08-1-x	T12-13/07-D1-x	50
16	330	178	13/07-08-1-x	13/07-08-1-x	T16-13/07-D1-x	50
24	330	178	13/07-08-1-x	13/07-16-1-x	T24-13/07-D1-x	40
32	330	178	13/07-16-1-x	13/07-16-1-x	T32-13/07-D1-x	20

Material options: eP28(HIPS,standard blue color)and eP26(MPPE,standard black color)

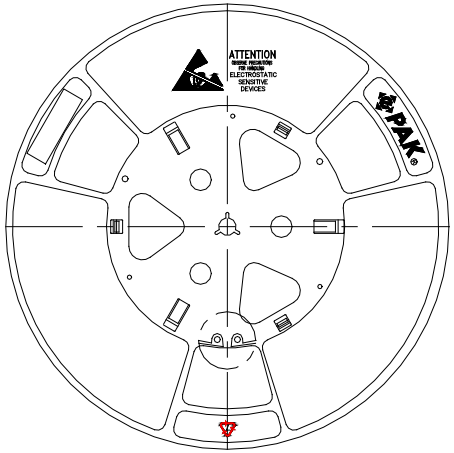

4 INCH HUB “D” STYLE–2-PC LOCKING

Tape Width	Dia mm	Hub mm	Left Half Order Code	Right Half Order Code	Assembled Reel Order Code	Standard Packing Quantity
8	330	101	13/04-04-3-x	13/04-04-3-x	T08-13/04-D3-x	
12	330	101	13/04-04-3-x	13/04-08-3-x	T12-13/04-D3-x	50
16	330	101	13/04-08-3-x	13/04-08-3-x	T16-13/04-D3-x	50
24	330	101	13/04-08-3-x	13/04-16-3-x	T24-13/04-D3-x	40
32	330	101	13/04-16-3-x	13/04-16-3-x	T32-13/04-D3-x	30
44	330	101	13/04-16-3-x	13/04-28-3-x	T44-13/04-D3-x	20
56	330	101	13/04-28-3-x	13/04-28-3-x	T56-13/04-D3-x	10

Material options: eP28(HIPS, standard blue color) and eP26(MPPE, standard black color)

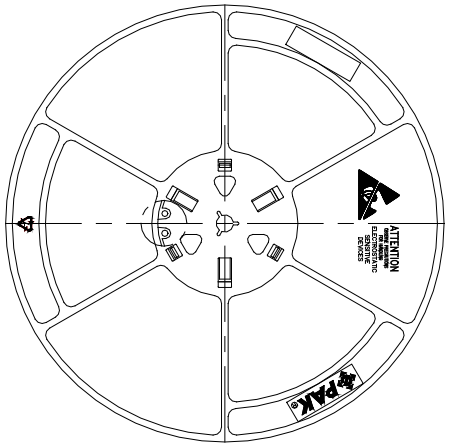

Copyright © 1999-2024 ePAK International, Inc.

13 INCH REELS

4 INCH SLOT HUB "A" STYLE–2-PC LOCKING

Tape Width	Dia mm	Hub Mm	Left Half Order Code	Right Half Order Code	Assembled Reel Order Code	Standard Packing Quantity
8	330	100	13/04-04-1-x	13/04-04-1-x	T08-13/04-A1-x	
12	330	100	13/04-04-1-x	13/04-08-1-x	T12-13/04-A1-x	25
16	330	100	13/04-08-1-x	13/04-08-1-x	T16-13/04-A1-x	50
16	330	100	13/04-08-12-x	13/04-8-12-x	T16-13/04-A12-x	25
24	330	100	13/04-08-1-x	13/04-16-1-x	T24-13/04-A1-x	40
32	330	100	13/04-16-1-x	13/04-16-1-x	T32-13/04-A1-x	30
44	330	100	13/04-16-1-x	13/04-28-1-x	T44-13/04-A1-x	20
56	330	100	13/04-28-1-x	13/04-28-1-x	T56-13/04-A1-x	10

Material options: eP28(HIPS, standard blue color) and eP26 (MPPE, standard black color)

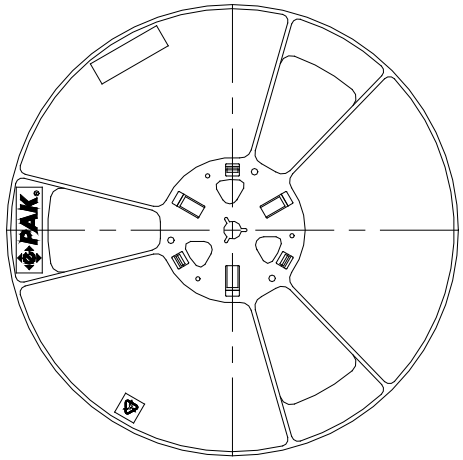

4 INCH SLOT HUB, "TYPE 35" STYLE–2-PC LOCKING

Tape Width	Dia mm	Hub Mm	Reel Assembly Hub inner width	Left Half Order Code	Right Half Order Code	Assembled Reel Order Code
8	330	101.5	8.4	13/04-04-35	13/04-04-35	T8-13/4-A35-BK
12	330	101.5	12.4	13/04-04-35	13/04-08-35	T12-13/4-A35-BK
16	330	101.5	16.4	13/04-08-35	13/04-08-35	T16-13/4-A35-BK
24	330	101.5	24.4	13/04-08-35	13/04-16-35	T24-13/4-A35-BK
32	330	101.5	32.4	13/04-16-35	13/04-16-35	T32-13/4-A35-BK

Material options: PS (standard black color) SR 10e8-10e11

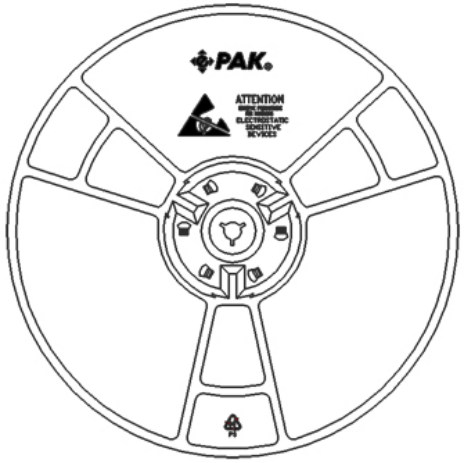

 Copyright © 1999-2024 ePAK International, Inc.

13 INCH REELS

6 INCH SNAIL HUB A STYLE–2-PC LOCKING

Tape Width	Dia mm	Hub mm	Left Half Order Code	Right Half Order Code	Assembled Reel Order Code	Standard Packing Quantity
44	330	150	13/04-16-3-x	13/04-28-3-x	S44-13/06-A4-x	20
44	330	150	13/04-16-3-x	13/04-28-3-x	S44-13/06-D4-x	20
44	330	127	13/04-16-3-x	13/04-28-3-x	S44-13/5-A24-x	20
44	330	127	13/04-16-3-x	13/04-28-3-x	S44-13/5-D24-x	20

Material options: eP28(HIPS, standard blue color) and eP26(MPPE, standard black color)

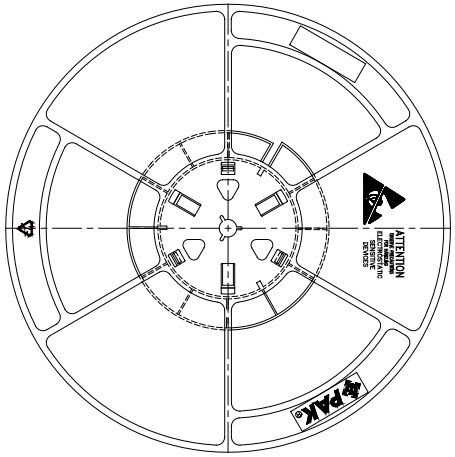

7 INCH SLOT HUB D STYLE–2-PC LOCKING

Tape Width	Dia mm	Hub mm	Left Half Order Code	Right Half Order Code	Assembled Reel Order Code	Standard Packing Quantity
8	330	178	13/7-4-10	13/7-4-10	T8-13/7-D10	
12	330	178	13/7-4-10	13/7-8-10	T12-13/7-D10	40
16	330	178	13/7-8-10	13/7-8-10	T16-13/7-D10	32
24	330	178	13/7-8-10	13/7-16-10	T24-13/7-D10	24
32	330	178	13/7-16-10	13/7-16-10	T32-13/7-D10	20

Material options: eP28(HIPS, standard black color), eP26(MPPE, standard black color)

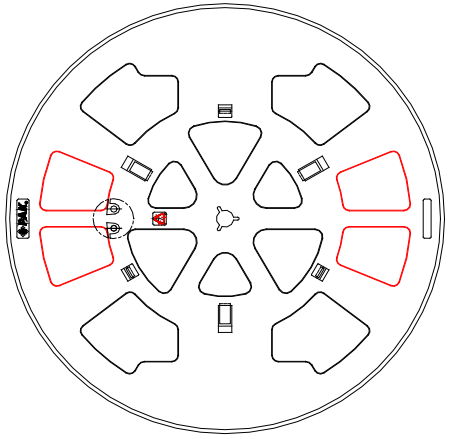

Copyright © 1999-2024 ePAK International, Inc.

13 INCH REELS

7 INCH SLOT HUB A STYLE–2-PC WELDED

Tape Width	Dia mm	Hub mm	Assembled Reel Order Code	Standard Packing Quantity
12	330	178	T12-13/7-A7-x	25
24	330	178	T24-13/7-A7-x	24

Material options: eP28(HIPS, standard black color)

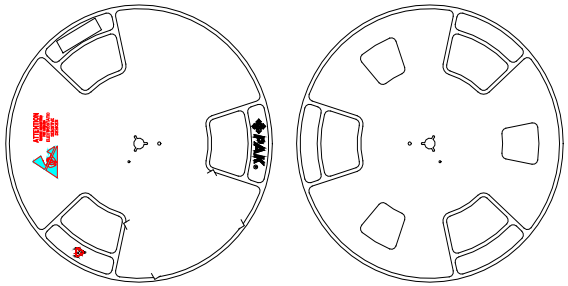

3 INCH SLOT HUB A STYLE–2-PC WELDED

Tape Width	Dia mm	Hub mm	Left Half Order Code	Right Half Order Code	Assembled Reel Order Code	Standard Packing Quantity
16	330	80	13/3-8-15	13/3-8-15	T16-13/3-C15-x	50
24	330	80	13/3-8-15	13/3-16-15	T24-13/3-C15-x	40
32	330	80	13/3-16-15	13/3-16-15	T32-13/3-C15-x	30

Material options: eP28(HIPS, standard black color)

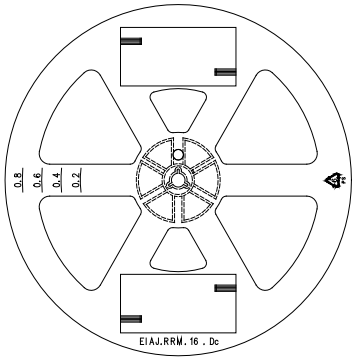

4 INCH SLOT HUB A STYLE–2-PC WELDED

Tape Width	Dia mm	Hub mm	Left Half Order Code	Right Half Order Code	Assembled Reel Order Code	Standard Packing Quantity
24	330	100	13/04-24-6-x	13/04-0-6-x	T24-13/04-A6-x	25

Material options: eP28(HIPS, standard black color)

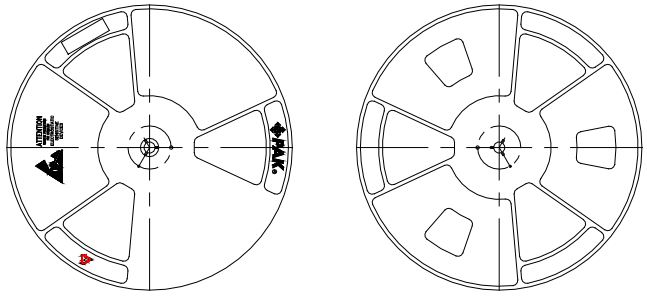

 Copyright © 1999-2024 ePAK International, Inc.

7 INCH REELS

7 INCH REELS–A1

Tape Width	Dia Mm	Hub mm	Assembled Reel Order Code	Standard Packing Quantity
8	178	51	T08-7/2-A1-x	200

Material options: eP28(HIPS)

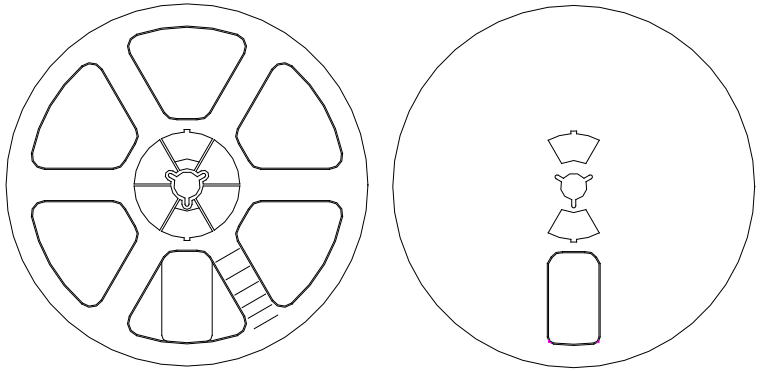

7 INCH REELS – A4/A6/A8

Tape Width	Dia mm	Hub mm	Assembled Reel Order Code	Standard Packing Quantity
8	178	60	T08-7/2.4-A4-x	200
8	178	60	T08-7/2.4-A6-x	200
8	180	60	T08-7/2.4-A8-x	200
12	180	60	T12-7/2.4-A2-x	200

Material options: eP28(HIPS)

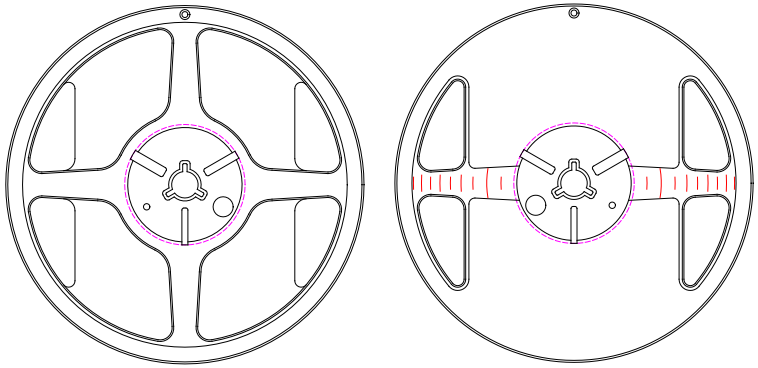

Copyright © 1999-2024 ePAK International, Inc.

PART NUMBER SYSTEM
ePAK REELS

PRE-ASSEMBLED AND SINGLE PIECE REELS	T X X - X / X - X X - X X Color code Material and style code Hub diameter (inch) Reel diameter (inch) Tape width (mm) Hub style

HALF-REEL COMPONENTS	X / X - X X - X X - X X Color code Material and style code Reel half width Hub diameter (inch) Reel diameter (inch)

 Copyright © 1999-2024 ePAK International, Inc.

LOCATIONS

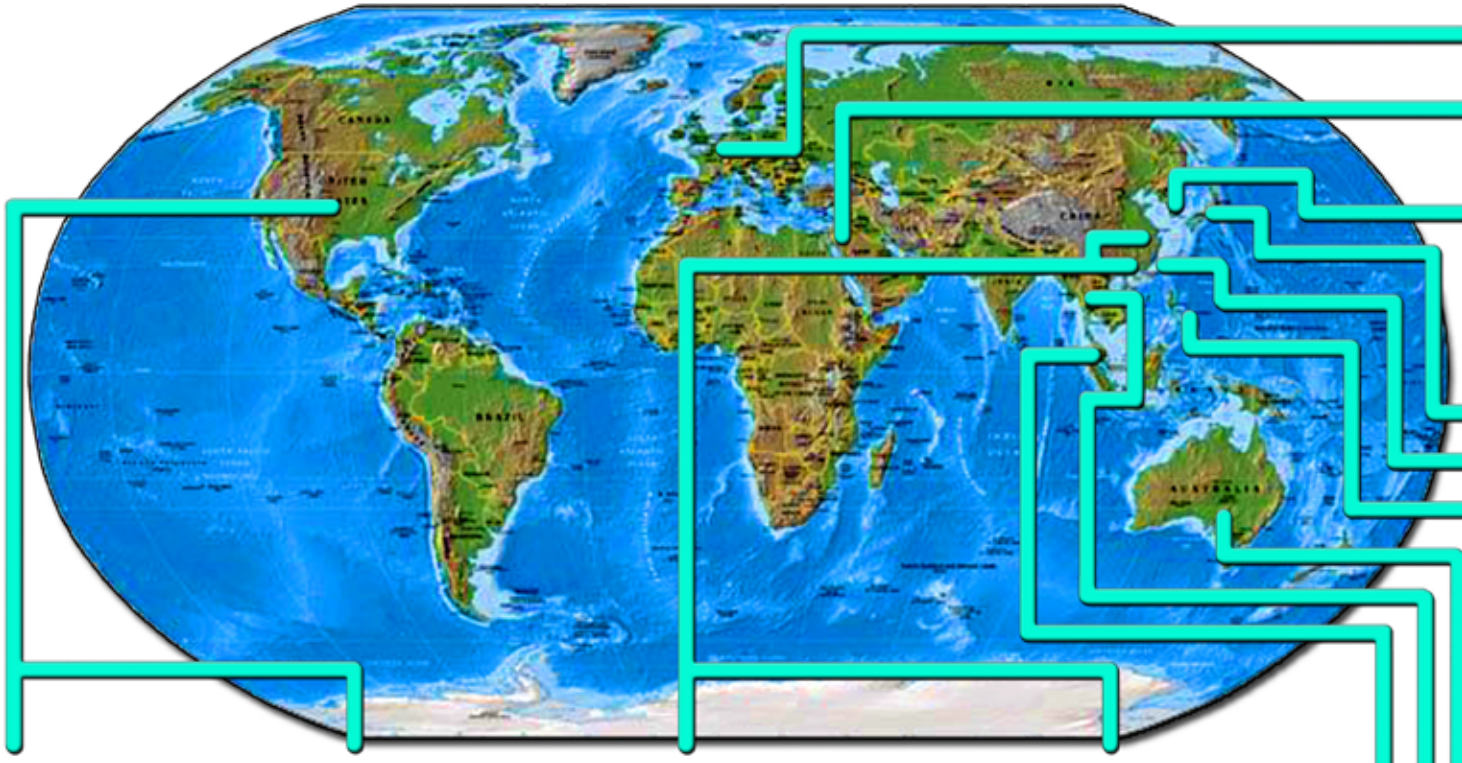

SPS-Europe
Europe
Phone: +31 341 360590
Fax: +31 341 360589

M.Y.G. Tech
Israel
Phone: +972-8 9760620
Fax: +972-8-9760621

ePAK Korea
Seoul, Korea
Phone: +822-401-2627
Fax: +822-401-2618

Kanematsu Kangawa
Japan Head Office:
Phone:(81)936610360
Fax:(81)936618552

ePAK Taiwan
Taipei, Taiwan
Phone: +886-2-291-49591
Fax: +886-2-291-49597

ePAK Philippines
Manila, Philippines
Phone: +63-908-815-8322
Land: +63-49-302-5812

ePAK International, Inc.
Austin, Texas, U.S.A.
Phone: +1-512-231-8083
Fax: +1-512-231-8183

Redstone Technical
Colorado Springs, CO U.S.A.
Phone: +1-719-445-8822

ePAK Solutions (SZ) Co.,Ltd.
ePAK Technologies (SZ) Co.,Ltd.
Shenzhen, China
Phone: +86-755-3382-7888
Fax: +86-755-2862-1452

Anhui ePAK Precision Technologies Co.,Ltd.
Wuhu, Anhui, China
Phone: +86-553-2675888
Fax: +86-553-5628886

ePAK Resources (S) Pte Ltd.
Singapore
Phone: +65-6846-9908
Fax: +65-6547-4269

Litetronics (S) Pte Ltd.
Singapore
Phone: +65-6842-7889
Fax: +65-6842-7229

Koike (M) Sdn Bhd
Malaysia
Phone: +603-31763923
Fax: +603-31763923

NSI(Thailand) Co., Ltd.
Thailand
Phone: 02-663-3070-2
Fax: 02-663-3073

Jas Pak (S) Pte., Ltd.
Thailand
Phone: +65 6481 0045
Fax: +65 6483 0045

MMRC Pty Ltd.
Australia
Phone:+61-3-9885-1752
Fax: +61-3-9885-2603

Copyright © 1999-2024 ePAK International, Inc.