Tape and Reel IC Shipping Products Catalog

 Copyright © 1999-2020 ePAK International, Inc.

CARRIER TAPE

BGA/CSP

Device Type	Order Code	Style	W	F	P	AO	BO	KO	K1	T	22"	Drawing	Tool
BGA 4x4	eC3-BG0404-12-8-F1-L	F	12	5.50	8	4.35	4.35	1.70	N/A	0.30		eCA0049	✔
BGA 4.2X4.4	eC3-BG4.24.4-12-8-F1-L	F	12	5.50	8	4.40	4.60	1.00		0.30		eCA1692	✔
BGA 4x4.5	eC3-BGA044.5-12-08-P1-L	P	12	5.50	8	4.40	4.90	1.20	0.54	0.30		eCA1516	✔
BGA 4.2X4.4	eC3-BG4.24.4-12-8-F1-L	F	12	5.50	8	4.40	4.60	1.00		0.30		eCA1692	✔
BGA 4x5	eC3-BG0405-12-8-F1-L	F	12	5.50	8	4.40	5.40	1.40		0.30		eCA1574	✔
BGA 5x5	eC3-BG0505-12-8-F1-L	F	12	5.50	8	5.35	5.35	1.70	N/A	0.30		eCA0048	✔
BGA 5x5	eC3-BGA0505-12-08-P1-L	P	12	5.50	8	5.35	5.35	1.50	0.51	0.30		eCA1517	✔
BGA 5x5	eC3-BG0505-12-08-P2-L	P	12	5.50	8	5.40	5.40	1.80	1.30	0.30		eCA1526	✔
BGA 5x5	eC3-BG0505-12-08-P3-L	P	12	5.50	8	5.35	5.35	1.00		0.30		eCA1567	✔
BCC 5X5	eC3-BCC5X5-16-12-P1-L	P	16	7.50	12	5.26	5.26	1.60	1.10	0.30		eCA0452	✔
BGA 5X7.5	eC3-BG5X7.5-16-8-F1-L	F	16	7.50	8	5.35	7.85	1.80	1.05	0.30		eCA1051	✔
BGA 5.2x6.3	eC3-BG5.26.3-12-8-F1-L	F	12	5.50	8	5.45	6.55	1.00		0.30		eCA1691	✔
BGA 5.3x5.3	eC3-BGA5.35.3-12-8-P1-L	P	12	5.50	8	5.65	5.65	1.20	0.60	0.30		eCA1687	✔
BGA 5.5x4.5	eC3-BGA5.5x4.5-12-8-P1-L	P	12	5.50	8	4.80	5.80	1.25	0.76	0.30		eCA1535	✔
BGA 5.5x5.5	eC3-BG5.55.5-12-8-F1-L	F	12	5.50	8	5.75	5.75	0.72		0.30		eCA1441	✔
BGA 5.5x5.5x0.57	eC3-BG5.5X5.5X0.57-12-8-P1-L	P	12	5.50	8	5.85	5.85	1.06	0.42	0.30		eCA1452	✔
BGA 6x6	eC3-BG0606-12-8-F1-L	F	12	5.50	8	6.35	6.35	1.70	N/A	0.30		eCA0047	✔
BGA 6x6	eC3-BG0606-12-8-P1-L	P	12	5.50	8	6.30	6.30	2.00	1.30	0.30		eCA0143	✔
BGA 6x6	eC3-BG0606-12-8-P2-L	P	12	7.50	8	6.30	6.30	2.25	1.25	0.30		eCA1184	✔
BGA 6x6	eC3-BG0606-16-12-P3-L	P	16	7.50	12	6.30	6.30	1.65	1.00	0.30		eCA1503	✔
BGA 6x6	eC3-BG0606-12-8-P4-L	P	12	5.50	8	6.38	6.38	1.90	0.95	0.30		eCA1508	✔

Copyright © 1999-2020 ePAK International, Inc.

CARRIER TAPE

BGA/CSP

Device Type	Order Code	Style	W	F	P	AO	BO	KO	K1	T	22"	Drawing	Tool
TFBGA 6.29X10.53	eC3-TFBGA6.29X10.53-16-12-P1-L	P	16	7.50	12	10.90	6.80	1.60	0.85	0.30		eCA0473	✔
BGA 6.5X10	eC3-BG6.5X10-24-8-P1-L	P	24	11.50	8	6.80	10.30	1.70	1.00	0.30		eCA1182	✔
BGA 6x8	eC3-BG0608-16-12-F1-L	F	16	7.50	12	6.35	8.35	1.70	N/A	0.30		eCA0051	✔
BGA 6x9	eC3-BG0609-16-12-F1-L	F	16	7.50	12	6.35	9.35	1.70	N/A	0.30		eCA0052	✔
BGA 6.2x6.2	eC3-BG6.2X6.2-16-12-P1-L	P	16	7.50	12	6.55	6.55	1.63	0.94	0.30		eCA1442	✔
BGA 7x7	eC3-BG0707-16-12-P2-L	P	16	7.50	12	7.30	7.30	2.30	1.30	0.30		eCA1183	✔
CSP 7x7	eC3-CSP7.X7.0X0.75-16-12-P1-L	P	16	7.50	12	7.30	7.30	1.30	1.15	0.30		eCA0777	✔
BGA 7x7	eC3-BG0707-16-12-F1-L	F	16	7.50	12	7.35	7.35	1.70	N/A	0.30		eCA0046	✔
BGA 7x7	eC3-BG0707-16-12-P1-L	P	16	7.50	12	7.30	7.30	2.00	1.30	0.30		eCA0142	✔
BCC 7X7	eC3-BCC7X7-16-12-P1-L	P	16	7.50	12	7.28	7.28	1.43	0.93	0.30		eCA0453	✔
BGA 8x8	eC3-BG0808-16-12-P1-L	P	16	7.50	12	8.30	8.30	2.50	1.50	0.30		eCA0135	✔
BGA 8x8	eC3-BG0808-16-12-F1-L	F	16	7.50	12	8.35	8.35	1.70	N/A	0.30		eCA0045	✔
BGA 8x8	eC3-BGA0808-16-12-F3-L	F	16	7.50	12	8.30	8.30	1.10		0.30		eCA1528	✔
BGA 8x8	eC3-BGA0808-16-12-F4-L	F	16	7.50	12	8.30	8.30	1.10		0.30		eCA1531	✔
FPBGA 8x12	eC3-FPBGA8X12-24-12-F1-L	F	24	11.50	12	8.30	12.30	1.60	N/A	0.30		eCA0564	✔
BGA 9x9	eC3-BG0909-16-12-F1-L	F	16	7.50	12	9.35	9.35	1.70	N/A	0.30		eCA0044	✔
BGA 9x9	eC3-BG0909-16-12-P1-L	P	16	7.50	12	9.35	9.35	2.20	1.20	0.30		eCA0778	✔
BGA 9.6x8.6	eC3-BGA9.68.6-24-16-F1-L	F	24	11.50	16	10.00	9.00	1.43		0.30		eCA1696	✔
TFBGA 9x14x1	eC3-TFBGA9X14X1-24-12-F1-L	F	24	11.50	12	9.35	14.35	1.50	0.90	0.30		eCA1018	✔

Copyright © 1999-2020 ePAK International, Inc.

BGA(continued)

Device Type	Order Code	Style	W	F	P	AO	BO	KO	K1	T	22"	Drawing	Tool
BGA 10x8	eC3-BGA10x8-24-12-P1-L	P	24	11.50	12	8.30	10.30	1.65	1.12	0.30		eCA1536	✓
BGA 10x10	eC3-BG1010-24-16-F1-L	F	24	11.50	16	10.35	10.35	1.90	N/A	0.30		eCA0058	✓
BGA 10x10	eC3-BG1010-24-12-F1-L	F	24	11.50	12	10.35	10.35	1.90	N/A	0.30		eCA0043	✓
FPBGA 10x10	eC3-FPBG1010-24-16-P1-L	P	24	11.50	16	10.40	10.40	2.50	1.50	0.30		eCA0137	✓
BGA 10x10	eC3-BG1010-24-16-P1-L	P	24	11.50	16	10.30	10.30	1.70	0.80	0.30		eCA1052	✓
BGA 10X12	eC3-BGA10X12-24-12-F1-L	F	24	11.50	12	10.35	12.35	2.00	N/A	0.30		eCA0476	✓
BGA 11x11	eC3-BG1111-24-16-F1-L	F	24	11.50	16	11.35	11.35	1.90	N/A	0.30		eCA0042	✓
BGA 11x11	eC3-BG11x11-24-16-P1-L	P	24	11.50	16	11.40	11.40	2.00	1.22	0.30		eCA1444	✓
BGA 11X11	eC3-BGA1111-24-16-F3-L	F	24	11.50	16	11.30	11.30	1.80	1.10	0.30		eCA1801	✓
BGA 11X13.8	eC3-BGA11X13.8-24-16-F1-L	F	24	11.50	16	11.35	14.10	1.85	N/A	0.30		eCA0477	✓
BGA 12x12	eC3-BG1212-24-16-P1-L	P	24	11.50	16	12.30	12.30	2.00	1.20	0.30		eCA0136	✓
BGA 12x12	eC3-BG1212-24-16-F1-L	F	24	11.50	16	12.35	12.35	1.90	N/A	0.30		eCA0041	✓
BGA 12x12	eC3-BGA1212-24-16-P4-L	P	24	11.50	16	12.30	12.30	1.80	1.14	0.30		eCA1518	✓
BGA 12x12	eC3-BGA1212-24-16-P5-L	P	24	11.50	16	12.30	12.30	1.50	0.85	0.30		eCA1579	✓
BGA 12x12	eC3-BG1212-24-16-P2-L	P	24	11.50	16	12.35	12.35	2.30	N/A	0.30		eCA0188	✓
BGA 12.5x12.5	eC3-BGA12.5X12.5-24-16-P2-L	P2	24	11.50	16	12.80	12.80	1.50	0.85	0.30		eCA1728	✓
BGA 13x13	eC3-BG1313-24-24-F1-L	F	24	11.50	24	13.35	13.35	1.90	N/A	0.30		eCA0050	✓
BGA 1313	eC3-BGA1313-24-16-P1-L	P	24	11.50	16	13.35	13.35	2.30	1.10	0.30		eCA1139	✓
BGA 14x14	eC3-BG1414-24-20-F1-L	F	24	11.50	20	14.35	14.35	2.10		0.30		eCA1499	✓
BGA 14x14	eC3-BGA1414-24-20-P1-L	P	24	11.50	20	14.30	14.30	2.10	1.25	0.30		eCA1575	✓

 Copyright © 1999-2020 ePAK International, Inc.

CARRIER TAPE

BGA(continued)

Device Type	Order Code	Style	W	F	P	AO	BO	KO	K1	T	22"	Drawing	Tool
BGA 15x15	eC3-BG1515-24-20-P1-L	P	24	11.50	20	15.35	15.35	2.00	1.40	0.30		eCA0525	✔
BGA 16x16	eC3-BG1616-24-24-P1-L	P	24	11.50	24	16.35	16.35	2.30	1.25	0.30		eCA1555	✔
BGA 17x17	eC3-BG1717-24-24-F1-L	F	24	11.50	24	17.35	17.35	2.3	1.2	0.3		eCA0582	✔
BGA 17x17	eC3-BG1717-24-24-F2-L	F	24	11.50	24	17.35	17.35	2.10		0.30		eCA1500	✔
BGA 18x18	eC3-BG1818-32-24-P1-L	P	32	14.20	24	18.40	18.40	3.70	2.70	0.30		eCA0376	✔
BGA 21x21	eC3-BG21X21-32-24-P1-L	P	32	14.20	24	21.40	21.40	2.70	1.60	0.30		eCA0411	✔
BGA 21x21	eC3-BG2121-32-28-P2-L	P	32	14.20	28	21.40	21.40	3.20	2.30	0.30		eCA1490	✔
BGA 23x23x2.35	eC4-BG2323x2.35-44-28-P1-L	P	44	20.20	28	23.50	23.50	3.10	2.10	0.40		eCA1435	✔
BGA 27x27	eC4-BG2727-44-32-P1	P	44	20.20	32	27.40	27.40	2.90	1.90	0.40		eCA0016	✔
BGA 27x27	eC3-BG2727-44-32-P1	P	44	20.20	32	27.50	27.50	3.60	1.90	0.30		eCA0025	✔
	eC3-1000037805-CTPK016-16-12-F1-L	F	16	7.50	12	6.60	7.40	2.80	N/A	0.30		eCA1412	✔
	eC3-1000040592-CTPK012-12-8-F1-L	F	12.00	5.50	8.00	5.30	5.30	2.70		0.30		eCA1460	✔
	eC4-1000037494-CTPK056-56-24-F1-L	F	56	26.20	24	15.80	36.30	6.60	N/A	0.40		eCA1366	✔
	eC4-1000038199-CTPK001-12-8-F1-L	F	12	5.50	8	4.00	4.30	2.90	N/A	0.40		eCA1415	✔
	eC4-1000040802-SM22C87-16-8-F1-L	F	16.00	7.50	8.00	4.10	6.50	4.00		0.40		eCA1469	✔
	eC4-1000041047-CTPK012-12-8-F1-L	F	12.00	5.50	8.00	4.80	5.40	3.70		0.30		eCA1475	✔
	eC4-99-1002-00-16-12-F1-L	F	16	7.50	12	8.80	9.80	4.30	N/A	0.40		eCA1413	✔
	eN3.5-1348-1YY0008-16-4-F1-L	F	16	7.50	4	1.00	7.00	1.90	N/A	0.35		eCA1401	✔

Copyright © 1999-2020 ePAK International, Inc.

BGA(continued)

Device Type	Order Code	Style	W	F	P	AO	BO	KO	K1	T	22"	Drawing	Tool
	eN3-99-0912-00-12-8-F1-L	F	12	5.50	8	3.25	3.25	1.50		0.30		eCA1445	✔
	eN4-99-0838-00-16-12-F1-L	F	16	7.50	12	7.10	7.80	3.30		0.40		eCA1446	✔
	eN4-99-0847-00-24-16-F1-L	F	24.00	11.50	16.00	10.50	12.10	4.30		0.40		eCA1448	✔
	eN4-99-0860-00-24-16-F1-L	F	24.00	11.50	16.00	12.90	13.90	5.70		0.40		eCA1449	✔
	eN4-99-0871-00-24-16-F1-L	F	24.00	11.50	16.00	11.10	12.00	4.30		0.40		eCA1450	✔
	eN4-99-0872-00-24-16-F1-L	F	24.00	11.50	16.00	11.10	12.00	5.70		0.40		eCA1483	✔
	eN4-99-0875-00-16-12-F1-L	F	16.00	7.50	12.00	7.00	7.80	2.20		0.40		eCA1480	✔
	eN4-99-0877-00-16-12-F1-L	F	16	7.50	12	7.00	7.80	5.30		0.40		eCA1447	✔
	eN4-99-0889-00-24-16-F1-L	F	24.00	11.50	16.00	12.30	13.70	5.20		0.40		eCA1451	✔
	eN4-99-0891-00-16-12-F1-L	F	16.00	7.50	12.00	8.70	9.40	4.30		0.40		eCA1479	✔
	eN4-99-0906-00-24-16-F1-L	F	24.00	11.50	16.00	12.30	13.70	3.70		0.40		eCA1482	✔
	eN4-99-0947-00-24-16-F1-L	F	24.00	11.50	16.00	12.30	13.70	4.70		0.40		eCA1481	✔
	eN4-99-1008-01-16-12-F1-L	F	16.00	7.50	12.00	8.40	8.40	4.70		0.40		eCA1474	✔
	eN4-99-VTH7-02-16-16-F1-L	F	16.00	7.50	16.00	8.00	8.00	7.50		0.40		eCA1493	✔
	eN5-99-0729-01-24-16-F1-L	F	24.00	11.50	16.00	12.50	12.50	8.50		0.50		eCA1471	✔

 Copyright © 1999-2020 ePAK International, Inc.

CARRIER TAPE

QFN

Device Type	Order Code	Style	W	F	P	AO	BO	KO	K1	T	22"	Drawing	Tool
QFN 2.2x2.4	eC3-QFN2.2X2.4-12-8-F1-L	F	12	5.50	8	2.70	2.50	1.00		0.30		eCA1512	✔
QFN 5x5	eC3-QFN5x5-12-8-F1-L	F	12	5.50	8	5.35	5.30	1.10		0.30		eCA1777	✔
QFN 8x7	eC3-QFN8X7-16-12-P1-L	P	16	7.50	12	7.30	8.30	1.40	1.20	0.30		eCA1561	✔
QFN 11.5x11.5	eC3-QFN11.5x11.5-24-16-P1-L	P	24	11.50	16	11.80	11.80	1.60	1.00	0.30		eCA1570	✔

LGA

Device Type	Order Code	Style	W	F	P	AO	BO	KO	K1	T	22"	Drawing	Tool
LGA 5x5	eC3-LGA0505-12-8-F2-L	F	12	5.50	8	5.35	5.35	1.30		0.30		eCA1436	✔
LGA 6X7	eC3-LGA6X7-16-8-F1-L	F	16	7.50	8	6.39	7.39	1.90		0.30		eCA1037	✔
LGA 6x7	eC3-LGA6X7-16-8-F2-L	F2	16	7.50	8	6.39	7.39	1.25		0.30		eCA1458	✔
LGA 8.3x8.3	eC3-LGA8.38.3-16-12-F1-L	F	16	7.5	12	8.7	8.7	2.5	N/A	0.3		eCA0510	✔
LGA 9x9	eC3-LGA0909-24-12-F1-L	F	24	11.5	12	9.35	9.35	1.7	N/A	0.3		eCA0516	✔

PLCC

Device Type	Order Code	Style	W	F	P	AO	BO	KO	K1	T	22"	Drawing	Tool
PLCC 20	eC4-PLCC20-16-12-F1-L	F	16	7.50	12	10.30	10.30	4.90	N/A	0.40		eCA0072	✔
PLCC 32	eC3-PLCC32-24-16-P1-L	P	24	11.50	16	12.90	15.50	3.90	3.60	0.30		eCA0071	✔
PLCC 32	eC3-PLCC32-24-16-F1-L	F	24	11.50	16	13.10	15.50	3.90	N/A	0.30		eCA0161	✔
PLCC HEP	eC3-HEP7LD-44-24-F1-L	F	44	20.20	24	10.80	22.90	5.20	N/A	0.30		eCA0160	✔
PLCC 44	eC4-PLCC44-32-24-P1-L	P	32	14.20	24	18.00	18.00	5.70	5.50	0.40		eCA0262	✔
PLCC 68	eC4-68PLCC-44-32-P1-L	P	44	20.20	32	25.60	25.60	5.20	4.10	0.40		eCA0509	✔
PLCC 28	eC3-28PLCC-24-16-P1-L	P	24	11.50	16	13.00	13.00	4.75	3.85	0.30		eCA0526	✔

Copyright © 1999-2020 ePAK International, Inc.

CARRIER TAPE

SOIC

Device Type	Order Code	Style	W	F	P	AO	BO	KO	K1	T	22"	Drawing	Tool
SOIC 8	eC3-S08N-12-8-F1-L	F	12	5.50	8	6.40	5.20	2.10	N/A	0.30		eCA0040	✔
SOIC 8	eC3-SOIC08-12-8-P1	P	12	5.50	8	6.90	5.40	2.10	1.85	0.30		eCA0012	✔
SOIC 8	eC3-SOIC08-12-8-P2-L	P	12	5.50	8	6.50	5.40	2.00	1.70	0.30		eCA0027	✔
SOIC 8	eC3-SOIC8-12-8-F2-L	F	12	5.50	8	6.50	5.50	2.10	N/A	0.30		eCA0187	✔
SOIC 8	eC3-SOIC8L-12-8-P1	P	12	5.50	8	6.50	5.30	2.20	1.90	0.30		eCA0011	✔
SOIC 8	eC3-SOIC8P-12-8-P3-L	P	12	5.50	8	6.20	5.20	2.10	1.70	0.30		eCA0184	✔
SOIC 8	eC3-SOIC08W-16-12-P4-L	P	16	7.50	12	8.30	5.70	2.30	2.00	0.30		eCA1261	✔
SOIC 8	eC3-SOIC08(150mil)-12-8-F1-L	F	12	5.50	8	6.40	5.20	2.10		0.30		eCA1288	✔
SOIC 14	eC3-SO-14P-B-16-8-P1-L	P	16	7.50	8	6.50	9.50	2.30	1.80	0.30		eCA0301	✔
SOIC 14/16	eC3-SOIC14/16N-16-8-F1-L	F	16	7.50	8	6.50	9.00	2.10	N/A	0.30		eCA0139	✔
SOIC 16	eC3-SO-16P-B-16-8-P1-L	P	16	7.50	8	6.50	10.30	2.30	1.80	0.30		eCA0300	✔
SOIC 16	eC3-SOIC16-16-12-F1-L	F	16	7.50	12	10.90	10.70	3.00		0.30		eCA1248	✔
SOIC 16	eC3-SO16LP-A-16-12-P1-L	P	16	7.50	12	10.90	10.70	3.20	2.70	0.30		eCA0302	✔
SOIC 20	eC3-SOIC20-24-12-P1-L	P	24	11.50	12	10.80	12.96	2.65	N/A	0.30		eCA0138	✔
SOIC 20	eC3-SOIC20-24-12-P2-L	P	24	11.50	12	10.75	13.40	3.20	2.60	0.30		eCA0183	✔
SOIC 24	eC3-SOIC24 300 MIL-24-16-P1-L	P	24	11.50	16	10.80	15.80	3.10	2.60	0.30		eCA1351	✔
SOIC 28	eC3-SOIC28-24-12-P1-L	P	34	11.50	12	10.80	18.30	3.10	2.80	0.30		eCA0839	✔
SOIC 32	eC3-SOIC32-32-16-F1-L	F	32	14.20	16	10.90	21.20	3.10		0.30		eCA1247	✔

Copyright © 1999-2020 ePAK International, Inc.

CARRIER TAPE

SSOP/TSOP/SOP

Device Type	Order Code	Style	W	F	P	AO	BO	KO	K1	T	22"	Drawing	Tool
C202	eC3-C202-103-16-8-P1-L	P	16	7.50	8	6.90	3.40	1.60	1.20	0.30		eCA0487	✔
SOP-24	eC3-SOP24-24-12-F1-L	F	24.00	11.50	12.00	10.90	16.00	3.00		0.30		eCA1410	✔
QSOP-20	eC3-QSOP20-16-12-P1-L	P	16	7.50	12	6.50	9.00	2.50	2.00	0.30		eCA1174	✔
MSOP-08	eC3-MSOP08-12-8-F1-L	F	12	5.50	8	5.30	3.40	1.40	N/A	0.30		eCA0235	✔
SSOP-16	eC3-SSOP16L-16-12-P1-L	P	16	7.50	12	8.60	6.70	2.30	2.00	0.30		eCA0345	✔
SSOP-20	eC3-SSOP20-16-12-P2-L	P	16	7.50	12	8.40	7.60	2.60	2.10	0.30		eCA0838	✔
SSOP-20	eC3.5-SSOP20-16-12-P3-L	P	16.00	7.50	12.00	8.40	7.56	2.53	1.93	0.35		eCA1054	✔
SSOP-24	eC3-SSOP24-16-12-P1-L	P	16	7.50	12	8.30	8.70	2.40	2.10	0.30		eCA0771	✔
SSOP-28	eC3-SSOP28-24-12-P1-L	P	24	11.50	12	8.80	10.60	2.50	2.00	0.30		eCA0377	✔
SSOP-48	eC3-SSOP48-32-16-P1-L	P	32	14.20	16	11.20	16.30	3.10	2.60	0.30		eCA0166	✔
SSOP-48(DP)	eC3-SSOP-48(DP)-24-12-P1-L	P	24	11.50	12	8.60	15.80	1.80	1.30	0.30		eCA0035	✔
SSOP-56	eC3-SSOP56-32-16-P1-L	P	32	14.20	16	11.20	18.90	3.10	2.60	0.30		eCA0167	✔
TSOP-28	eC3-TSOP28-16-12-P1-L	P	16	7.50	12	6.80	10.10	1.80	1.35	0.30		eCA0227	✔
TSOP-40	eC3-TSOP40-32-16-P1-L	P	32	14.20	16	10.30	20.20	1.70	1.10	0.30		eCA0146	✔
TSOP-44	eC3-TSOP44P-32-16-P1-L	P	32	14.20	16	12.20	19.10	1.65	N/A	0.30		eCA0232	✔
TSOP-44	eC3-TSOP44P-32-16-P1-L	P	32	14.20	16	12.20	19.10	1.65	N/A	0.30		eCA0232	✔
TSOP-48	eC3-TSOP48-32-16-P1-L	P	32	14.20	16	12.30	20.25	1.70	1.20	0.30		eCA0159	✔
TSOP-54	eC3-TSOP54-44-16-P1-L	P	44	20.2	16	12.2	22.8	1.7	1.35	0.3		eCA0619	✔

Copyright © 1999-2020 ePAK International, Inc.

CARRIER TAPE

TSSOP

Device Type	Order Code	Style	W	F	P	AO	BO	KO	K1	T	22"	Drawing	Tool
TSSOP-8(PW)	eC3-TSSOP-8(PW)-16-8-P1-L	P	24	11.50	12	6.60	16.50	3.80	N/A	0.40		eCA0073	✔
TSSOP-14/16	eC3-TSSOP14/16-16-12-PI-L	P	16	7.50	12	7.40	5.40	1.60	1.05	0.30		eCA0378	✔
TSSOP-14/16	eC3-TSSOP14/16-16-8-P2-L	P	16	7.50	8	6.80	5.40	1.80	1.30	0.30		eCA0767	✔
TSSOP-20	eC3-TSSOP20-16-12-P1-L	P	16	7.50	12	6.90	7.10	1.85	1.35	0.30		eCA0185	✔
TSSOP20	eC3-TSSOP20-16-8-P3-L	P	16	7.50	8	6.80	7.00	1.60	1.10	0.30		eCA0958	✔
TSSOP-20	eC3-TSSOP20-16-8-P2-L	P	16	7.50	8	6.80	7.10	1.85	1.35	0.30		eCA0765	✔
TSSOP-20	eC3-TSSOP20-12-8-P1-L	P	12	5.50	8	6.80	7.00	1.60	1.20	0.30		eCA0506	✔
TSSOP-24	eC3-TSSOP24-16-8-P1-L	P	16	7.50	8	6.95	8.30	1.60	1.20	0.30		eCA0217	✔
TSSOP-28	eC3-TSSOP28-16-12-P1-L	P	16	7.50	12	6.80	10.10	1.80	1.35	0.30		eCA0227	✔
TSSOP-28	eC3-TSSOP28-16-8-P2-L	P	16	7.50	8	6.80	10.10	1.80	1.30	0.30		eCA0766	✔
TSSOP-28	eC3-TSSOP28-16-12-P3-L	P	16	7.50	12	8.60	10.20	1.80	1.30	0.30		eCA1425	✔
TSSOP-48	eC3-TSSOP48L-24-12-P1-L	P	24	11.50	12	8.85	12.90	1.50	1.30	0.30		eCA1765	✔
TSSOP-56	eC3-TSSOP56L-24-12-P1-L	P	24	11.50	12	8.85	14.60	1.50	1.30	0.30		eCA1764	✔
TSSOP-64/80	eC3-TSSOP64/80L-24-12-P1-L	P	24	11.50	12	8.85	17.45	1.50	1.30	0.30		eCA1759	✔

Copyright © 1999-2020 ePAK International, Inc.

CARRIER TAPE

MQFP/TQFP/LQFP

Device Type	Order Code	Style	W	F	P	AO	BO	KO	K1	T	22"	Drawing	Tool
LQFP 7x7	eC3-LQFP07007x1.4-16-12-P1-L	P	16	7.50	12	9.80	9.80	2.00	1.70	0.30		eCA0018	✔
LQFP 7X7	eC3-LQFP-7X7X1.4-16-12-P2-L	P	16	7.50	12	9.27	9.27	2.15	1.55	0.30		eCA0432	✔
LQFP 7x7	eC3-LQFP-7X7X1.4-16-12-P3-L	P	16	7.50	12	9.40	9.40	2.15	1.55	0.30		eCA0769	✔
LQFP 10x10	eC3-LQFP1010x1.4-24-16-P1-L	P	24	11.50	16	13.00	13.00	2.00	1.70	0.30		eCA0017	✔
MQFP 10x10	eC3-MQFP1010X2.0-24-20-P1-L	P	24	11.50	20	14.50	14.50	3.20	2.20	0.30		eCA1433	✔
LQFP 12x12	eC3-LQFP1212X1.4-24-20-P1-L	P	24	11.50	20	17.50	15.50	2.30	N/A	0.30		eCA0194	✔
TQFP 14x14	eC3-TQFP1414x1.0-24-20-P1-L	P	24	11.50	20	16.60	16.60	1.70	1.20	0.30		eCA1408	✔
TQFP 14x14	eC3-TQFP1414X1.0-32-24-P2-L	P	32	14.20	24	16.60	16.60	1.70	1.20	0.30		eCA1562	✔
TQFP 14x14	eC3-TQFP1414X1.0-32-24-P3-L	P3	32	14.20	24	17.20	17.20	1.60	1.10	0.30		eCA1695	✔
LQFP 14x14	eC3-LQFP1414X1.4-24-20-P1-L	P	24	11.50	20	17.20	17.20	2.00	1.50	0.30		eCA0193	✔
QFP 14x14	eC3.5-QFP1414X2.2-32-24-P3-L	P	32	14.20	24	17.70	17.70	3.00	2.20	0.35		eCA1190	✔
MQFP 14x20	eC4-MQFP1420x2.7-44-24-P2-L	P	44	20.20	24	19.30	25.30	3.90	2.70	0.40		eCA0228	✔
PQFP 14x20	eC3-PQFP1420X2.0-44-24-P1-L	P	44	20.20	24	19.30	25.30	3.25	2.00	0.30		eCA0485	✔
LQFP 14x20	eC3-LQFP1420X1.4-44-24-P1-L	P	44	20.20	24	19.00	25.00	2.50	1.40	0.30		eCA0511	✔
LQFP 20x20	eC3-LQFP 20x20x1.4-44-32-P2-L	P	44	20.20	32	22.63	22.63	2.20	1.70	0.30		eCA1407	✔
LQFP 24x24	EC3-LQFP24X24X1.4-44-32-P1-L	P	44	20.20	32	27.50	27.50	2.00	1.70	0.30		eCA1470	✔

Copyright © 1999-2020 ePAK International, Inc.

CARRIER TAPE

CRYSTAL

Device Type	Order Code	Style	W	F	P	AO	BO	KO	K1	T	22"	Drawing	Tool
Crystal	eN3-NO-2886-16-4-P1-L	P	16	7.50	4	2.20	8.20	1.80	1.75	0.30		eCA0032	✔
Crystal	eC4-MS3H12/15-24-12-F1-L	F	24	11.50	12	5.00	15.00	4.35	N/A	0.40		eCA0059	✔
Crystal	eN4-HCJ-S-9075-24-8-FI-L	F	24	11.50	8	5.00	15.00	4.35	N/A	0.40		eCA0062	✔
Crystal	eN4-MS2H-24-8-F1-L	F	24	11.50	8	5.00	14.70	3.50	N/A	0.40		eCA0173	✔
Crystal	eC4-7X7-16-12-F1-L	F	16	7.50	12	7.30	7.30	3.90	N/A	0.40		eCA0753	✔

SOT

Device Type	Order Code	Style	W	F	P	AO	BO	KO	K1	T	22"	Drawing	Tool
SOT23	eC2-SOT23-8-4-F1-L	F	8	3.50	4	3.15	3.20	1.40	N/A	0.20		eCA0028	✔
SOT23	eN2-SOT23-8-4-F1-L	F	8	3.50	4	3.15	3.20	1.40	N/A	0.20		eCA0088	✔
SOT559	eC3-SOT559-24-16-F1-L	F	24	11.50	16	11.40	14.15	2.00	N/A	0.30		eCA0170	✔
SOT89	eC4-SOT89-12-8-F1-L	F	12	5.50	8	4.80	4.80	1.80	N/A	0.40		eCA0426	✔

Copyright © 1999-2020 ePAK International, Inc.

CARRIER TAPE

CONNECTOR

Device Type	Order Code	Style	W	F	P	AO	BO	KO	K1	T	22"	Drawing	Tool
Connector	eN4-161CGP-008-05-16-12-F1	F	16	7.5	12	6.6	9.16	6.1	N/A	0		eCA0006	✔
Connector	eN4-161CGP-008-06-16-12-F1	F	16	7.5	12	6.6	10.7	6.1	N/A	0		eCA0008	✔
Connector	eN4-161CGP-009-02-16-12-F1	F	16	7.5	12	6.6	4.66	6.1	N/A	0		eCA0009	✔
Connector	eN4-161CGP-009-07-24-12-F1	F	24	12	12	8.35	12.2	6.1	N/A	0		eCA0010	✔
Connector	eN4-161CGP-008-15-44-12-F1	F	44	20	12	6.6	24.2	6.1	N/A	0		eCA0026	✔
Connector	eN3-NO-2886-16-4-P1	P	16	7.5	4	2.2	8.2	1.8	1.75	0		eCA0032	✔
Connector	eN4-2-912079-0-24-8-P1	P	24	12	8	4.35	9.25	5.3	3.7	0		eCA0033	✔
Connector	eC5-5-912079-1-44-24-P1-L	P	44	20	24	8.3	30.3	10	N/A	1		eCA0057	✔
Connector	eN4-SP-72A-16-8-F1-L	P	16	7.5	8	3.9	8.7	2.7	N/A	0		eCA0070	✔
Connector	eN4-0-912093-1-24-12-P1-L	P	24	12	12	6.6	16.5	3.8	N/A	0		eCA0073	✔
Connector	eN4-9-912067-4-32-12-P1-L	P	32	14	12	6.5	19	6.7	5.75	0		eCA0075	✔
Connector	eN4-0-912067-7-32-12-P1-L	P	32	14	12	6.5	19	4.5	3.55	0		eCA0076	✔
Connector	eN4-1-9-912077-9-72-24-P1-L	P	72	34	24	13.7	49	4.2	N/A	0		eCA0096	✔
Connector	eN4-2-912078-9-12-P1-L	P	72	34	12	6.1	50.8	5.4	N/A	0		eCA0098	✔
Connector	eN4-0-912093-7-24-12-P1-L	P	24	12	12	6.6	16.5	4.3	N/A	0		eCA0099	✔
Connector	eN4-0-912094-1-32-12-P1-L	P	32	14	12	6.6	16.5	8.6	N/A	0		eCA0125	✔
Connector	eN4-0-912093-6-24-12-P1-L	P	24	12	12	6.6	14.1	14	N/A	0		eCA0126	✔
Connector	eC4-6-912079-8-56-48-P1-L	P	56	26	48	43.8	36.3	5.1	N/A	0		eCA0130	✔
Connector	eN4-0-912094-2-32-12-P1-L	P	32	14	12	6.6	17.3	2.6	N/A	0		eCA0140	✔
Connector	eN4-0-912095-3-44-12-P1-L	P	44	20	12	6.6	29.8	2.6	N/A	0		eCA0141	✔
Connector	eN5-9-912058-8-32-12-P1-L	P	32	14	12	5.9	20.5	5.5	4.25	1		eCA0148	✔
Connector	eN5-1-720999-5-16-8-P1-L	P	16	7.5	8	4.7	8	5	3.8	1		eCA0152	✔
Connector	eN3-SP-T3A-16-8-F1-L	F	16	7.5	8	4.5	7.8	2.2	N/A	0		eCA0158	✔
Connector	eN4-9-912068-4-16-12-P1-L	P	16	7.5	12	4.3	9.8	2	1.4	0		eCA0163	✔

Copyright © 1999-2020 ePAK International, Inc.

CARRIER TAPE

CONNECTOR(continued)

Device Type	Order Code	Style	W	F	P	AO	BO	KO	K1	T	22"	Drawing	Tool
Connector	eN4-161CGP-008-11-24-12-F1-L	F	24	12	12	6.6	18.2	6.1	N/A	0		eCA0205	✔
Connector	eN4-161CGP-008-12-32-12-F1-L	F	32	14	12	6.6	19.7	6.1	N/A	0		eCA0206	✔
Connector	eN4-7-912075-1-24-12-P1-L	P	24	12	12	5.9	14.3	5.8	N/A	0		eCA0207	✔
Connector	eN5-7-912055-9-24-12-P1-L	P	24	12	12	5.9	18	7.5	N/A	1		eCA0218	✔
Connector	eN5-6-912055-2-24-12-P1-L	P	24	12	12	6	16.8	7.3	N/A	1		eCA0219	✔
Connector	eN4-912094-3-32-12-P1-L	P	32	14	12	6.8	16.5	6.7	N/A	0		eCA0221	✔
Connector	eC4-0-912096-3-56-52-P1-L	P	56	26	52	43.8	36.3	5.1	N/A	0		eCA0222	✔
Connector	eN4-7-912061-0-44-12-P1-L	P	44	20	12	5.4	29.1	4.3	3.5	0		eCA0242	✔
Connector	eN4-7-912061-1-44-12-P1-L	P	44	20	12	5.6	29.1	4.4	3.6	0		eCA0243	✔
Connector	eN5-1-720999-4-16-8-P1-L	P	16	7.5	8	4.7	6.75	3.8	N/A	1		eCA0250	✔
Connector	eC5-639423-1-16-8-P1-L	P	16	7.5	8	5.6	5.6	4.4	2.9	1		eCA0421	✔
Connector	eC4-76190-16-8-P1-L	P	16	7.5	8	5.5	8.5	4.6	3.8	0		eCA0448	✔
Connector	eN3-SPF-24A-24-16-F1-L	F	24	12	16	11.1	17.8	2.9	N/A	0		eCA0471	✔
Connector	eC4-1-912092-2-16-8-P1-L	P	16	7.5	8	3.3	7.3	4.4	1.85	0		eCA0475	✔
Connector	eN5-5-0912110-4-104-32-P1-L	P	#	50	32	13	83	8.6	6.8	1		eCA0478	✔
Connector	eN5-1-0097196-6-88-16-P1-L	P	88	42	16	7.1	70.1	13	12.2	1		eCA0479	✔
Connector	eC5-AJ352-9-24-20-P1-L	P	24	12	20	10.3	12.3	11	8.45	1		eCA0480	✔
Connector	eC4-TPP1002-56-16-F1-L	F	56	26	16	11.5	45.6	4.8	N/A	0		eCA0481	✔
Connector	eC5-887-9620-74-24-16-P1-L	P	24	12	16	10.2	9.43	5.6	4.3	1		eCA0491	✔

Copyright © 1999-2020 ePAK International, Inc.

CONNECTOR(continued)

Device Type	Order Code	Style	W	F	P	AO	BO	KO	K1	T	22"	Drawing	Tool
Connector	eN5-2-912093-1-32-12-P1-L	P	32	14	12	5.8	10.5	7	6	1		eCA0505	✔
Connector	eN4-NORTEK-24-12-P1-L	P	24	12	12	7.3	13.8	4.7	3.5	0		eCA0507	✔
Connector	eN5-0-0097195-4-88-16-P1-L	P	88	42	16	8.5	70.1	9.3	8.25	1		eCA0515	✔
Connector	eC4-3PIN-16-12-F1-L	F	16	7.5	12	8.6	8.8	5.1	N/A	0		eCA0518	✔
Connector	eC4-2PIN-16-12-F1-L	F	16	7.5	12	8.6	6.2	5.1	N/A	0		eCA0519	✔
Connector	eC4-4PIN-24-12-F1-L	F	24	12	12	8.6	11.2	5.1	N/A	0		eCA0520	✔
Connector	eC4-427/8/9-24-12-P1-L	P	24	12	12	8.1	13.3	4.9	3.9	0		eCA0522	✔
Connector	eC5-639423-1-16-8-P2-L	P	16	7.5	8	5.6	5.6	4.4	N/A	1		eCA0524	✔
Connector	eN5-2-912093-6-24-12-P1-L	P	24	12	12	4.4	12.8	7.4	6.6	1		eCA0538	✔
Connector	eN5-0-912096-9-56-28-P1-L	P	56	26	28	23.9	33.2	5	4.7	1		eCA0539	✔
Connector	eN3-2-912093-0-24-8-F1-L	F	24	12	8	5.3	11.1	3.4	N/A	0		eCA0540	✔
Connector	eN4-DMS2350CJ01-44-28-P1-L	P	44	20.2	28	23.4	31.8	10	9	0.40		eCA0562	✔
Connector	eC3-1-912092-7-16-8-F1-L	F	16	7.5	8	4.95	7.9	1.2	N/A	0		eCA0584	✔
Connector	eC3-1-912092-8-16-8-F1-L	F	16	7.5	8	2.91	6.4	1.1	N/A	0		eCA0585	✔
Connector	eC3-2-912093-7-24-8-F1-L	F	24	12	8	4.95	15.9	1.2	N/A	0		eCA0586	✔
Connector	eC3-2-912093-9-24-8-F1-L	F	24	12	8	2.91	14.4	1.1	N/A	0		eCA0588	✔
Connector	eN4-LVC-B20SFYGTP-24-8-P1-L	P	24	12	8	5.8	16.6	4	3	0		eCA0591	✔
1533250-2	eC4-1000017249Rev.--12-8-F1-L	F	12	5.50	8	4.11	4.44	3.54	N/A	0.40		eCA0595	✔

 Copyright © 1999-2020 ePAK International, Inc.

CONNECTOR(continued)

Device Type	Order Code	Style	W	F	P	AO	BO	KO	K1	T	22"	Drawing	Tool
Connector	eC4-6.1x5.5-12-8-F1-L	F	12	5.5	8	5.5	6.1	4	N/A	0		eCA0604	✔
Connector	eC3-3-912093-3-24-8-F1-L	F	24	12	8	2.91	10.4	1.6	N/A	0		eCA0605	✔
Connector	eC3-3-912093-4-24-8-F1-L	F	24	12	8	4.95	10.4	1.8	N/A	0		eCA0606	✔
Connector	eN4-6AF6K4NNET020-24-16-F1-L	F	24	12	16	10.3	13.7	3.9	N/A	0		eCA0609	✔
Connector	eC4-1000017417-16-12-F1-L	F	16	7.5	12	7.03	7.91	4.6	N/A	0		eCA0611	✔
Connector	eC5-1000017540-44-20-F1-L	F	44	20.2	20.	13.6	27.3	9.6	N/A	0.5		eCA0612	✔
Connector	eN5-1-912096-1-56-24-P1-L	P	56	26	24	15.5	41.5	8.8	5.8	1		eCA0622	✔
Connector	eC4-230-0670-24-12-P1-L	P	24	12	12	9.9	13.1	2.7	2.2	0		eCA0623	✔
Connector	eC5-TP-K-0055-24-16-F1-L	F	24	12	16	13.3	7	9.5	N/A	1		eCA0624	✔
Connector	eN4-3-0912093-9-24-12-P1-L	P	24	12	12	9	14.5	4.5	3.7	0		eCA0625	✔
Connector	eC3-SPF-48A-24-16-P1-L	P	24	11.5	16	11.1	17.8	2.9	2.2	0.3		eCA0626	✔
Connector	eC3-TE-1612A-16-12-P1-L	P	16	7.5	12	8.1	8.2	1.9	1.6	0		eCA0628	✔
Connector	eC3-TE-1612B-16-12-P1-L	P	16	7.5	12	8.1	10.1	1.9	1.6	0		eCA0629	✔
Connector	eC5-1000017876-56-20-F1-L	F	56	26.2	20	14.3	40.3	9.9	N/A	0.5		eCA0631	✔
Connector	eN4-ZC-270-12-8-F1-L	F	12	5.5	8	5.9	5.9	3.5	N/A	0		eCA0635	✔
Connector	eC2-DS1077-8-4-F1-L	F	8	3.5	4	1.78	2.27	0.84	N/A	0.2		eCA0636	✔
Connector	eC3-4-912093-1-24-8-P1-L	P	24	12	8	3.8	11.2	1.8	1.3	0		eCA0638	✔
Connector	eN4-1-912094-8-32-12-P1-L	P	32	14.2	12	6.63	17	4.95	3.75	0.4		eCA0642	✔
Connector	eN3-95JD-16-8-F1-L	F	16	7.5	8	5.7	9.1	1.9	N/A	0.3		eCA0643	✔
Connector	eN4-7-912073-1-88-32-P1-L	P1	88	42.2	32	27	72.3	7.4	6.2	0.4		eCA0645	✔
Connector	eN4-PT-1640-SK02-T1-16-8-F1-L	F	16	7.5	8	4.15	10.5	3.7	N/A	0.4		eCA0647	✔

 Copyright © 1999-2020 ePAK International, Inc.

CARRIER TAPE

CONNECTOR(continued)

Device Type	Order Code	Style	W	F	P	AO	BO	KO	K1	T	22"	Drawing	Tool
Connector	eC4-0-1332004-1-44-24-P1-L	P	44	20.2	24	19.4	23	7.5	N/A	0.4		eCA0653	✔
Connector	eC3-1-912091-4-12-8-F1-L	F	12	5.5	8	4.95	5.9	1.2	N/A	0.3		eCA0654	✔
Connector	eC3-1-912091-5-12-8-F1-L	F	12	5.5	8	2.91	4.4	1.13	N/A	0.3		eCA0655	✔
Connector	eC3-2-912092-6-16-8-F1-L	F	16	7.5	8	4.95	8.7	1.2	N/A	0.3		eCA0656	✔
Connector	eC3-2-912092-7-16-8-F1-L	F	16	7.50	8	2.91	7.20	1.13	N/A	0.30		eCA0657	✔
Connector	eC3-4-912093-4-24-8-F1-L	F	24	11.50	8	4.95	13.90	1.20	N/A	0.30		eCA0658	✔
Connector	eC3-4-912093-5-24-8-F1-L	F	24	11.50	8	2.91	12.40	1.13	N/A	0.30		eCA0659	✔
Connector	eC3-2-912094-0-32-8-F1-L	F	32	14.20	8	2.91	18.40	1.13	N/A	0.30		eCA0660	✔
Connector	eC3-1-912094-9-32-8-F1-L	F	32	14.20	8	4.95	19.90	1.20	N/A	0.30		eCA0661	✔
Connector	eN3-TDF1575U07T-12-8-F1-L	F	12	5.50	8	5.70	5.30	2.50	N/A	0.30		eCA0662	✔
Connector	eN3-ML-414R4/F9F-16-8-P1-L	P	16	7.50	8	4.90	10	2.60	2	0.30		eCA0666	✔
Connector	eN5-9-0912057-5-56-12-P1-L	P	56	26.20	12	8.70	38.10	9.40	8.40	0.50		eCA0667	✔
Connector	eN4-5444396-4E1(H40)-44-12-F1-L	F	44	20.20	12	8	25.20	3.70	N/A	0.40		eCA0668	✔
Connector	eN5-BD3002-003-24-16-F1-L	F	24	11.50	16	10.20	9.40	5.50	N/A	0.50		eCA0670	✔
Connector	eN3-6AF6K4NN60120-24-8-F1-L	F	24	11.50	8	5.40	13.40	2.45	N/A	0.30		eCA0671	✔
Connector	eC5-MAFRIN0205-32-28-P1-L	P	32	14.50	28	22.85	19.87	9.10	8.10	0.50		eCA0674	✔
Connector	eN5-M3005-16-12-P1-L	P	16	7.50	12	5.20	4.60	5.40	2.90	0.50		eCA0675	✔
Connector	eN4-2-0912092-8-16-16-P1-L	P	16	7.50	16	9.65	8.76	5.10	3.30	0.40		eCA0676	✔
SR20901	eC4-TPK0003-16-16-F1-L	F	16	7.50	16	9.90	7.70	3.45	N/A	0.40		eCA0679	✔
Connector	eC4-470192201-24-12-P1-L	P	24	11.50	12	7.82	10.20	3.30	3.05	0.40		eCA0680	✔
Connector	eC4-470192001-24-12-P1-L	P	24	11.50	12	7.82	10.20	3.10	2.85	0.40		eCA0681	✔
Connector	eC4-470191901-24-12-P1-L	P	24	11.50	12	7.82	10.20	3	2.75	0.40		eCA0682	✔

Copyright © 1999-2020 ePAK International, Inc.

CONNECTOR(continued)

Device Type	Order Code	Style	W	F	P	AO	BO	KO	K1	T	22"	Drawing	Tool
Connector	eC4-470191501-24-12-P1-L	P	24	11.50	12	7.82	10.20	2.60	2.35	0.40		eCA0683	✔
Connector	eC4-470202801-24-12-P1-L	P	24	11.50	12	5.40	15.20	3.85	3.65	0.40		eCA0684	✔
Connector	eC4-470201801-24-12-P1-L	P	24	11.50	12	5.40	15.20	2.85	2.65	0.40		eCA0685	✔
Connector	eC4-470201601-24-12-P1-L	P	24	11.50	12	5.40	15.20	2.65	2.45	0.40		eCA0686	✔
Connector	eC4-470203401-24-12-P1-L	P	24	11.50	12	5.40	15.20	4.45	4.25	0.40		eCA0687	✔
Connector	eC5-TPK004007-32-16-F1-L	F	32	14.20	16	11.50	20.50	8	N/A	0.50		eCA0692	✔
Connector	eC4-LPY-60SMY1-TP-32-12-F1-L	F	32	14.20	16	4.20	11.20	1.40	N/A	0.40		eCA0693	✔
Connector	eC4-LPY-40SMY1-TP-1-32-12-F1-L	F	32	14.20	12	4.20	8.20	1.40	N/A	0.40		eCA0694	✔
Connector	eC4-LPY-EA60SFY-TP-1-32-12-F1-L	F	32	14.20	12	6.70	12.80	1.45	N/A	0.40		eCA0695	✔
Connector	eC4-;PY-EA40SFY-TP-1-32-12-F1-L	F	32	14.20	12	6.70	9.80	1.45	N/A	0.40		eCA0696	✔
Connector	eC4-1000018627-12-8-F1-L	F	12	5.50	8	4.50	4.50	2.73	N/A	0.40		eCA0697	✔
Connector	eC4-887962267-24-12-P1-L	P	24	11.50	12	6.30	9.60	4.30	3.80	0.40		eCA0698	✔
Connector	eN3-ML-414R/F9K-16-8-P1-L	P	16	7.50	8	4.10	6.50	1.72	N/A	0.30		eCA0699	✔
Connector	eN3-ML-414R/F9J-16-8-P1-L	P	16	7.50	8	4.20	5.30	1.72	N/A	0.30		eCA0700	✔
Connector	eN4-SA2D14-24-16-F1-L	F	24	11.50	16	14.20	14.20	4	N/A	0.40		eCA0701	✔
Connector	eC4-LPY-EA30SFY-TP-1-32-12-F1-L	F	32	14.20	12	6.70	8.30	1.45	N/A	0.40		eCA0704	✔
Connector	eC4-LPY-EA70SFY-TP-1-32-12-F1-L	F	32	14.20	12	6.70	14.30	1.45	N/A	0.40		eCA0705	✔
Connector	eC4-LPY-EA80SFY-TP-1-32-12-F1-L	F	32	14.20	12	6.70	15.80	1.45	N/A	0.40		eCA0706	✔
Connector	eC4-LPY-30SMY1-TP-1-32-12-F1-L	F	32	14.20	12	4.20	6.70	1.40	N/A	0.40		eCA0707	✔
Connector	eC4-LPY-70SMY1-TP-1-32-12-F1-L	F	32	14.20	12	4.20	12.70	1.40	N/A	0.40		eCA0708	✔

 Copyright © 1999-2020 ePAK International, Inc.

CONNECTOR(continued)

Device Type	Order Code	Style	W	F	P	AO	BO	KO	K1	T	22"	Drawing	Tool
Connector	eC4-LPY-80SMY1-TP-1-32-12-F1-L	F	32	14.20	12	4.60	14.60	1.40	N/A	0.40		eCA0709	✔
Connector	eC4-LPY-30SFY-TP-1-32-112-F1-L	F	32	14.20	12	4.20	8.30	1.40	N/A	0.40		eCA0710	✔
Connector	eC4-LPY-60SFY-TP-1-32-12-F1-L	F	32	14.20	12	4.20	12.80	1.40	N/A	0.40		eCA0711	✔
Connector	eC4-TPK004706-32-16-F1-L	F	32	14.20	16	10	16	5.80	N/A	0.40		eCA0716	✔
Connector	eN4-9JAXR3020-44-24-P1-L	P	44	20.20	24	17.20	18.20	6.90	5.25	0.40		eCA0717	✔
Connector	eC4-ZC-707-16-12-F1-L	F	16	7.50	12	6.35	7.11	4.82	N/A	0.40		eCA0732	✔
Connector	eC4-51-003-01-44-16-P1-L	P	44	20.20	16	7	31	8.70	7.40	0.40		eCA0743	✔
Connector	eC4-51-003-02-72-16-P1-L	P	72	34.20	16	7	56.80	8.70	7.40	0.40		eCA0744	✔
Connector	eC4-51-003-03-88-16-P1-L	P	88	42.20	16	7	72.10	8.70	7.40	0.40		eCA0745	✔
Connector	eC4-51-003-05-44-16-P1-L	P	44	20.20	16	7	34	8.70	7.40	0.40		eCA0746	✔
Connector	eC4-51-003-06-72-16-P1-L	P	72	34.20	16	7	59.30	8.70	7.40	0.40		eCA0747	✔
Connector	eC4-51-003-07-88-16-P1-L	P	88	42.20	16	7	74.60	8.70	7.40	0.40		eCA0748	✔
Connector	eC4-51-002-02-72-16-P1-L	P	72	34.20	16	7.50	56.80	10	7.40	0.40		eCA0749	✔
Connector	eC4-51-002-03-88-16-P1-L	P	88	42.20	16	7.50	72.10	10	7.40	0.40		eCA0750	✔
Connector	eN4-950252-56-48-P2-L	P	56	26.20	48	36.50	35.20	4.15	N/A	0.40		eCA0754	✔
Connector	eC3-6AF6K4NNETB02-16-8-F1-L	F	16	7.50	8	5.80	9.90	2.20	N/A	0.30		eCA0755	✔
Connector	eN5-5-912093-4-24-24-P1-L	P	24	11.50	24	17.30	13.80	12	10	0.50		eCA0757	✔
Connector	eN5-5-912093-5-24-24-P1-L	P	24	11.50	24	17.30	13.80	8.70	6.70	0.50		eCA0758	✔
Connector	eC4-GP4-SF0904-16-8-P1-L	P	16	7.50	8	6.30	9.50	5.50	5.20	0.40		eCA0763	✔
Connector	eN5-4-912093-3-24-12-P1-L	P	24	11.50	12	7.90	24	7.70	6.80	0.50		eCA0772	✔
Connector	eC4-3777-G-24-16-P1-L	P	24	11.50	16	9.78	13.20	6.12	5.33	0.40		eCA0779	✔

 Copyright © 1999-2020 ePAK International, Inc.

CARRIER TAPE

CONNECTOR(continued)

Device Type	Order Code	Style	W	F	P	AO	BO	KO	K1	T	22"	Drawing	Tool
Connector	eN4-1-912095-2-44-12-P1-L	P	44	20.20	12	6	29.10	3.80	3	0.40		eCA0780	✔
Connector	eN5-MOJ-B97-46-24-12-P1-L	P	24	11.50	12	7.90	15.60	7.10	6.30	0.50		eCA0781	✔
Connector	eN4-SA412B-24-8-F1-L	F	24	11.50	8	4.30	12.40	3.95	N/A	0.40		eCA0783	✔
MC-306	EN3-MC-306-16-8-F1-L	F	16	7.50	8	4.10	5.50	2.70	N/A	0.30		eCA0786	✔
Connector	eC4-ZC-264-16-12-F1-L	F	16	7.50	12	7.10	8.10	3.50	N/A	0.40		eCA0792	✔
Connector	ec4-ZC-724-16-12-F1-L	F	16	7.50	12	6.60	7.87	4.24	N/A	0.40		eCA0793	✔
Connector	eC4-ZC-759-24-16-F1-L	F	24	11.50	16	10.70	11.90	6.30	N/A	0.40		eCA0794	✔
Connector	eC4-LPY-60PSMY1-TP-1-32-12-P1-L	P	32	14.20	12	4.20	11.20	2	1.40	0.40		eCA0795	✔
Connector	eC4-LPY-40PSMY1-TP-1-32-12-P1-L	P	32	14.20	12	4.20	8.20	2	1.40	0.40		eCA0796	✔
Connector	eC4-LPY-eA60PSFY-TP-1-32-12-P1-L	P	32	14.20	12	6.70	12.80	2.05	1.45	0.40		eCA0797	✔
Connector	eC4-LPY-eA40PSFY-TP-1-32-12-P1-L	P	32	14.20	12	6.70	9.80	2.05	1.45	0.40		eCA0798	✔
Connector	eC4-GISI-6741-TP-1-32-12-P1-L	P	32	14.20	12	4.60	18.25	2.35	1.85	0.40		eCA0800	✔
Connector	eN5-5-912093-6-24-16-P1-L	P	24	11.50	16	12	9.75	4.12	3.52	0.50		eCA0801	✔
Connector	eN3-5-912093-7-24-8-F1-L	F	24	11.50	8	5.30	9.10	3.40	N/A	0.30		eCA0805	✔
Connector	eC4-Q20C002-16-12-F1-L	F1	16	7.50	12	6.60	6.10	4.10	N/A	0.40		eCA0806	✔
Connector	eC4-5334-965-391000-16-8-F1-L	F1	16	7.50	8	3.80	5.80	2.65	N/A	0.40		eCA0807	✔
Connector	eC3-5334-965-371000-24-8-F1-L	F1	24	11.50	8	4.50	15.40	3.90	N/A	0.30		eCA0808	✔
Connector	eC4-AJ427-24-12-P1-L	P	24	11.50	12	7	12.30	4.90	3.90	0.40		eCA0810	✔
Connector	eC4-LPY-30PSMY1-TP-1-32-12-P1-L	P	32	14.20	12	4.20	6.70	2	1.40	0.40		eCA0812	✔
Connector	eC4-LPY-70PSMY1-TP-1-32-12-P1-L	P	32	14.20	12	4.20	12.70	2	1.40	0.40		eCA0813	✔
Connector	eC4-LPY-80PSMY1-TP-32-12-P1-L	P	32	14.20	12	4.20	14.60	2	1.40	0.40		eCA0814	✔

Copyright © 1999-2020 ePAK International, Inc.

CARRIER TAPE

CONNECTOR(continued)

Device Type	Order Code	Style	W	F	P	AO	BO	KO	K1	T	22"	Drawing	Tool
Connector	eC4-LPY-30PSFY-TP-1-32-12-P1-L	P	32	14.20	12	4.20	8.30	2	1.40	0.40		eCA0815	✔
Connector	eC4-LPY-60PSFY-TP-1-32-12-P1-L	P	32	14.20	12	4.20	12.80	2	1.40	0.40		eCA0816	✔
Connector	eC4-LPY-EA70PSFY-TP-1-32-12-P1-L	P	32	14.20	12	6.70	14.30	2.05	1.45	0.40		eCA0817	✔
Connector	eC4-LPY-EA80PSFY-TP-1-32-12-P1-L	P	32	14.20	12	6.70	15.80	2.05	1.45	0.40		eCA0818	✔
Connector	eC4-ZC-277-16-12-F1-L	F1	16	7.50	12	7.44	8.38	5.54	N/A	0.40		eCA0819	✔
Connector	eC4-AKX-20LFY-TPA-01-24-16-P1-L	P	24	11.50	16	11	11.50	6.90	5.40	0.40		eCA0820	✔
Connector	eC4-MPT16B-24-24-F1-L	F1	24	11.50	24	20	16.40	3.30	N/A	0.40		eCA0821	✔
Connector	eN4-5444396-4E2(H30)-32-12-F1-L	F	32	14.20	12	8	20.20	3.70	N/A	0.40		eCA0825	✔
Connector	eN4-5444396-4E2(H50)-32-12-F1-L	F	32	14.20	12	8	30.20	3.70	N/A	0.40		eCA0826	✔
MOJ-B104	eN5-MOJ-B104-24-12-P1-L	P	24	11.50	12	9.40	14.50	6.10	5.30	0.50		eCA0828	✔
Connector	eC2.5-3.5X5.4X1.0-12-8-F1-L	F	12	5.50	8	3.50	5.40	1	N/A	0.25		eCA0829	✔
Connector	eN4-1000011482-12-8-F1-L	F1	12	5.50	8	6	4.60	4	N/A	0.40		eCA0831	✔
Connector	eC4-ZC-110-24-16-F1-L	F1	24	11.50	16	10.53	8.23	5.59	N/A	0.40		eCA0832	✔
Connector	eC5-TPK004006-32-16-F1-L	F1	32	14.20	16	11.50	18	8	N/A	0.50		eCA0833	✔
Connector	eN4-99-TeC-0038-24-16-F1-L	F	24	11.50	16	12.80	12.80	8	N/A	0.40		eCA0834	✔
Connector	eC5-ZC-639-56-40-F1-L	F	56	26.20	40	32.30	32.30	9.80	N/A	0.50		eCA0836	✔
51-008-01	eC4-51-008-01-24-16-P1-L	P	24	11.50	16	10.85	15.54	3.90	2.30	0.40		eCA0842	✔
51-008-02	eC4-51-008-02-24-16-P1-L	P	24	11.50	16	10.85	13.00	3.90	2.30	0.40		eCA0843	✔
51-008-03	eC4-51-008-03-44-16-P1-L	P	44	20.20	16	10.85	30.78	3.90	2.30	0.40		eCA0844	✔
51-008-04	eC4-51-008-04-44-16-P1-L	P	44	20.20	16	10.85	28.24	3.90	2.30	0.40		eCA0845	✔
51-008-05	eC4-51-008-05-72-16-P1-L	P	72	34.20	16	10.85	56.18	3.90	2.30	0.40		eCA0846	✔
51-008-06	eC4-51-008-06-72-16-P1-L	P	72	34.20	16	10.85	53.64	3.90	2.30	0.40		eCA0847	✔

Copyright © 1999-2020 ePAK International, Inc.

CARRIER TAPE

CONNECTOR(continued)

Device Type	Order Code	Style	W	F	P	AO	BO	KO	K1	T	22"	Drawing	Tool
1000013850	eC4-1000013850-16-12-F1-L	F	16	7.50	12	6.55	6.22	4.22	N/A	0.40		eCA0848	✔
51-009-01	eC4-51-009-01-24-16-P1-L	P	24	11.50	16	10.85	15.54	6.40	4.80	0.40		eCA0849	✔
51-009-02	eC4-51-009-02-24-16-P1-L	P	24	11.50	16	10.85	13.00	6.40	4.80	0.40		eCA0850	✔
51-009-03	eC4-51-009-03-44-16-P1-L	P	44	20.20	16	10.85	30.78	6.40	4.80	0.40		eCA0851	✔
51-009-04	eC4-51-009-04-44-16-P1-L	P	44	20.20	16	10.85	28.24	6.40	4.80	0.40		eCA0852	✔
51-009-05	eC4-51-009-05-72-16-P1-L	P	72	34.20	16	10.85	56.18	6.40	4.80	0.40		eCA0853	✔
51-009-06	eC4-51-009-06-72-16-P1-L	P	72	34.20	16	10.85	53.64	6.40	4.80	0.40		eCA0854	✔
LVC-C30SFYGTP-1	eCN4-LVC-C30SFYGTP-1-32-12-P1-L	P	32	14.20	12	3.90	21.40	4.00	3.00	0.40		eCA0861	✔
LVC-C40SFYGTP-1	eCN4-LVC-C40SFYGTP-1-44-12-P1-L	p	44	20.20	12	3.90	26.40	4.00	3.00	0.40		eCA0862	✔
1001-0026	eC5-1001-0026-44-12-F1-L	F	44	20.20	12	7.00	32.90	5.60	N/A	0.50		eCA0863	✔
EFD20	eC4-EFD20-44-32-P1-L	P	44	20.20	32	22.10	26.40	10.16	7.26	0.40		eCA0864	✔
3740007	eC4-3740007-72-24-F1-L	F	72	34.20	24	15.30	54.40	4.30	N/A	0.40		eCA0865	✔
1001-0005	eC5-1001-0005-44-12-F1-L	F	44	20.20	12	7.00	24.30	5.60	N/A	0.50		eCA0866	✔
LVX-A30SFYG-TP-1	eC4-LVX-A30SFYG-TP-1-32-8-P1-L	P	32	14.20	8.	5.80	16.90	1.90	1.50	0.40		eCA0867	✔
A3	eN3-A3-24-8-F1-L	F	24	11.50	8	4.15	12.10	1.50	N/A	0.30		eCA0871	✔
2-912094-5	eN4-2-912094-5-32-12-P1-L	P	32	14.20	12	9.00	18.30	4.00	3.60	0.40		eCA0872	✔
TB154-0400	eN4-TB154-0400-56-32-P1-L	P	56	26.20	32	27.00	36.10	10.60	9.60	0.40		eCA0873	✔
TET16C	eN4-TET16C-16-12-F1-L	F	16	7.50	12	8.10	7.60	6.00	N/A	0.40		eCA0875	✔
TET16D	eN4-TET16D-16-12-F1-L	F	16	7.50	12	9.10	8.60	6.00	N/A	0.40		eCA0876	✔
64005700	eC3-64005700-12-8-F1-L	F	12	5.50	8	5.45	5.45	2.00	N/A	0.30		eCA0877	✔
CAA(PCP50X15PS)TL	eC3-CARR(PCP50X15PS)TL-12-8-F1-L	F	12	5.65	8	4.80	4.45	1.70	N/A	0.30		eCA0878	✔
1000022928Rev.-	eN4-1000022928Rev.--16-8-F1-L	F	16	7.50	8	5.80	6.80	5.00	N/A	0.40		eCA0880	✔

Copyright © 1999-2020 ePAK International, Inc.

CARRIER TAPE

CONNECTOR(continued)

Device Type	Order Code	Style	W	F	P	AO	BO	KO	K1	T	22"	Drawing	Tool
J-14-029	eC3-J-14-029-12-4-F1-L	F	12	5.50	4	2.80	3.50	1.00	N/A	0.30		eCA0881	✔
MA-0123	eC4-MA-0123-24-8-F1-L	F	24	11.50	8	5.40	14.00	4.20	N/A	0.40		eCA0883	✔
9JAXS6442	eN4-9JAXS6442-56-24-F1-L	F	56	26.20	24	20.40	35.00	7.40	N/A	0.40		eCA0884	✔
SU5011	eC3-SU5011-12-8-F1-L	F	12	5.50	8	5.45	5.45	1.35	N/A	0.30		eCA0885	✔
SH3016	eC3-SH3016-12-8-F1-L	F	12	5.50	8	4.15	4.15	2.00	N/A	0.30		eCA0886	✔
SH5028	eC3-SH5028-16-12-F1-L	F	16	7.50	12	6.40	6.35	3.30	N/A	0.30		eCA0887	✔
SH5018	eC3-SH5018-16-12-P1-L	P	16	7.50	12	6.10	6.10	2.40	2.10	0.30		eCA0888	✔
SH4018	eC3-SH4018-12-8-P1-L	P	12	5.50	12	5.10	5.10	2.40	2.10	0.30		eCA0889	✔
LVX-A40SFYG-TP-1	eC4-LVX-A40SFYG-TP-1-32-8-P1-L	P	32	14.20	8	5.80	20.90	1.90	N/A	0.40		eCA0890	✔
SR0805	eC4-SR0805-16-12-P1-L	P	16	7.50	12	7.80	7.80	5.30	4.40	0.40		eCA0893	✔
SR0603	eC5-SR0603-12-8-P1-L	P	12	5.50	8	5.90	5.90	4.00	3.20	0.50		eCA0894	✔
MG804	eC5-MG804-00040-24-20-P1-L	P	24	11.50	20	8.60	8.60	10.30	8.30	0.50		eCA0895	✔
SDA-R11LFYG-TP-1	eN4-SDA-R11LFYG-TP-1-44-32-P1-L	P	44	20.20	32	22.80	27.00	3.60	2.60	0.40		eCA0935	✔
MFP24	eC3-MFP24-24-12-P1-L	P	24	11.50	12	9.10	13.60	2.40	2.20	0.30		eCA0937	✔
DCCOX-30L3	eN4-DCCOX-40L3-44-32-P1-L	P	44	20.20	32	3.20	23.07	2.20	1.60	0.40		eCA0939	✔
DCCOX-50L3	eN4-DCCOX-50L3-44-12-P1-L	P	44	20.20	12	3.20	27.37	2.50	1.90	0.40		eCA0942	✔
SR-20893	eC4-SR-20893-16-12-P1-L	P	16	7.50	12	4.10	4.10	5.80	N/A	0.40		eCA0951	✔
1000022479	eC5-1000022479-44-44-P1-L	P	44	20.20	44	32.50	31.20	11.80	8.00	0.50		eCA0954	✔
TB156-0400	eN4-TB156-0400-44-24-P1-L	P	44	20.20	24	21.20	32.50	4.10	3.30	0.40		eCA0962	✔
64006200	eC4-64006200-16-12-F1-L	F	16	7.50	12	6.60	7.10	5.20	N/A	0.40		eCA0963	✔
DFR-PAV040-1-EBTP	eN4-DFR-PAV040-1-EBTP-44-20-P1-L	P	44	20.20	20	10.30	26.50	5.60	4.60	0.40		eCA0965	✔
EFR-DAV040-1036-EBTP	eN4-DFR-DAV040-1036-EBTP-44-20-P1-L	P	44	20.20	20	5.50	25.00	5.60	4.60	0.40		eCA0966	✔

Copyright © 1999-2020 ePAK International, Inc.

CARRIER TAPE

CONNECTOR(continued)

Device Type	Order Code	Style	W	F	P	AO	BO	KO	K1	T	22"	Drawing	Tool
CPT405	eC4-CPT405-56-56-F1-L	F	56	26.20	56	46.20	40.80	6.30	N/A	0.40		eCA0970	✔
CPT403	eC4-CPT403-16-12-P1-L	P	16	7.50	12	8.20	7.90	4.20	3.10	0.40		eCA0972	✔
1000022808Rev.-	eC4-1000022808Rev.--12-8-F1-L	F	12	5.50	8	4.05	4.30	3.45	N/A	0.40		eCA0973	✔
5-912103-0	eN5-5-912103-0-88-24-P1-L	P	88	42.20	24	17.00	68.40	8.20	6.00	0.50		eCA0974	✔
DMS3450DJ01	eN5-DMS3450DJ01-56-40-P1-L	P	56	26.20	40	34.50	42.50	10.50	9.00	0.50		eCA0975	✔
MG804	eC4-MG804-00049-16-12-P1-L	P	16	7.50	12	6.10	8.83	4.90	4.50	0.40		eCA0978	✔
1000017249Rev.-	eN4-SR20901-56-56-F1-L	F	56	26.40	56	41.00	40.00	5.00	N/A	0.40		eCA0979	✔
1533250-1	eN4-1533250-1-72-12-P1-L	P	72	34.20	12	7.90	48.10	6.05	5.05	0.40		eCA0980	✔
DCCOX-10L3	eEN4-DCCOX-10L3-32-12-P1-L	P	32	14.20	12	3.20	8.07	2.20	1.60	0.40		eCA0982	✔
DCCOX-20L3	eN4-DCCOX-20L3-32-12-P1-L	P	32	14.20	12	3.20	13.07	2.20	1.60	0.40		eCA0983	✔
5.4X7.4X1.5	eC3-5.4X7.4X1.5-16-8-F1-L	F	16	7.50	8	5.40	7.40	1.50	N/A	0.30		eCA0985	✔
DCCOX-23L3	eN4-DCCOX-23L3-32-12-P1-L	P	32	14.20	12	3.20	14.57	2.20	1.60	0.40		eCA0986	✔
TPK005901	eC4-TPK005901-24-8-F1-L	F	24	11.50	8	5.30	11.00	4.80	N/A	0.40		eCA0988	✔
TPK005901	eC4-TPK005901-24-8-F1-L	F	24	11.50	8	5.30	11.00	4.80	N/A	0.40		eCA0988	✔
TPK0003	eC4-7314-G-24-16-F1-L	F	24	11.50	16	10.50	10.50	25.60	N/A	0.40		eCA0994	✔
TP-K-0015	eC4-TP-K-0015-16-12-F1-L	F	16	7.50	12	6.50	7.40	8.20	N/A	0.40		eCA0998	✔
7314-G	eN4-1533250-2-72-16-P1-L	P	72	34.20	16	9.74	57.95	6.60	4.15	0.40		eCA1001	✔
64012600	eC3-64012600-12-8-F1-L	F	12	5.50	8	5.10	4.60	1.60	N/A	0.30		eCA1002	✔
HCJ-S-9075	eN4-HCJ-S-9075-24-12-F2-L	F	24	11.50	12	5.00	15.00	4.35	N/A	0.40		eCA1003	✔
6-68-0052-00	eC3-6-68-0052-00-12-12-F1-L	F	12	5.50	12	6.90	3.30	2.40	N/A	0.30		eCA1011	✔
647c-b	eC4-647c-b-56-20-F1-L	F	56	26.20	20	11.58	39.78	6.60	N/A	0.40		eCA1014	✔
LVX-A30SFYG-TPA-1	eC4-LVX-A30SFYG-TPA-1-32-16-P2-L	P	32	14.20	16	5.80	16.90	1.90	1.50	0.40		eCA1015	✔
7403-G	eC5-7403-G-44-28-F1-L	F	44	20.20	28	19.30	16.50	13.00	N/A	0.50		eCA1016	✔

Copyright © 1999-2020 ePAK International, Inc.

CARRIER TAPE

CONNECTOR(continued)

Device Type	Order Code	Style	W	F	P	AO	BO	KO	K1	T	22"	Drawing	Tool
0220-0043-05	eC5-0220-0043-05-24-16-P1-L	P	24	11.50	16	10.92	12.83	8.64	7.11	0.50		eCA1019	✔
0220-0043-03	eC5-0220-0043-03-24-16-P1-L	P	24	11.50	16	10.92	15.88	7.49	5.97	0.50		eCA1020	✔
1827439	eC4-1827439-24-12-P1-L	P	24	11.50	12	8.05	11.70	5.80	4.70	0.40		eCA1021	✔
P39599-100P	eN5-P39599-100P-44-16-P1-L	P	44	20.20	16	5.70	28.30	5.00	4.00	0.50		eCA1022	✔
P39599	eN5-P39599-140P-56-16-P1-L	P	56	26.20	16	5.70	38.30	5.00	4.00	0.50		eCA1023	✔
P39598-100P	eN5-P39598-100P-44-16-P1-L	P	44	20.20	16	10.00	33.00	5.50	4.50	0.50		eCA1024	✔
P39598	eN5-P39598-140P-56-16-P1-L	P	56	26.20	16	10.00	42.00	5.50	4.50	0.50		eCA1025	✔
DCCOO-10S	eN4-DCCOO-10S-32-12-P1-L	P	32	14.20	12	2.20	8.37	4.35	3.75	0.40		eCA1027	✔
DCCOO-20S	eN4-DCCOO-20S-32-12-P1-L	P	32	14.20	12	2.20	13.37	4.35	3.75	0.40		eCA1028	✔
DCCOO-30S	eN4-DCCOO-30S-44-12-P1-L	P	44	20.20	12	2.20	18.37	4.35	3.75	0.40		eCA1029	✔
DCCOO-40S	eN4-DCCOO-40S-44-12-P1-L	P	44	20.20	12	2.20	23.37	4.35	3.75	0.40		eCA1030	✔
DCCOO-50S	eN4-DCCOO-50S-44-12-P1-L	P	44	20.20	12	2.20	28.37	4.35	3.75	0.40		eCA1031	✔
0-0097195-8	eN4-0-0097195-8-88-16-P1-L	P	88	42.20	16	8.50	62.10	8.25	7.25	0.40		eCA1032	✔
0-112344-2	eC4-0-112344-2-88-16-P1-L	P	88	42.20	16	6.30	63.00	6.00	5.00	0.40		eCA1033	✔
7436-G	eC4-7436-G-24-16-F1-L	F	24	11.50	16	12.00	14.00	5.30	N/A	0.40		eCA1039	✔
TPK0063	eC4-TPK0063-44-16-P1-L	P	44	20.20	16	8.90	22.70	6.60	5.30	0.40		eCA1045	✔
64004700	eC4-64004700-32-24-P1-L	P	32	14.20	24	16.80	19.60	7.70	6.90	0.40		eCA1046	✔
64000400	eC4-64000400-24-16-F1-L	F	24	11.50	16	11.80	11.80	6.80	N/A	0.40		eCA1056	✔
64000300	eC3-64000300-24-16-F1-L	F	24	11.50	16	11.80	11.80	5.00	N/A	0.30		eCA1057	✔
64005800	eC4-64005800-24-16-F1-L	F	24	11.50	16	13	13	6.30	N/A	0.40		eCA1058	✔
64000100	eC3-64000100-24-12-F1-L	F	24	11.50	12	9.30	9.30	4.60	N/A	0.30		eCA1059	✔
64006000	eC3-64006000-16-12-F1-L	F	16	7.50	12	7.90	7.90	3.80	N/A	0.30		eCA1060	✔
64000800	eC4-64000800-16-12-F1-L	F	16	7.50	12	10	6.20	6	N/A	0.40		eCA1061	✔

Copyright © 1999-2020 ePAK International, Inc.

CONNECTOR(continued)

Device Type	Order Code	Style	W	F	P	AO	BO	KO	K1	T	22"	Drawing	Tool
64000200	ec4-64000200-24-12-F1-L	F	24	11.50	12	9.30	9.30	6.40	N/A	0.40		eCA1062	✔
64001600	eC4-64001600-16-12-P1-L	P	16	7.50	12	6	8.60	5.60	4.40	0.40		eCA1063	✔
64000600	eC5-64000600-24-24-F1-L	F	24	11.50	24	15.70	16.90	8.30	N/A	0.50		eCA1064	✔
64006100	eC4-64006100-16-12-F1-L	F	16	7.50	12	7.90	7.90	4.90	N/A	0.40		eCA1065	✔
64000700	eC4-64000700-32-32-F1-L	F	32	14.20	32	22.80	16.70	8.70	N/A	0.40		eCA1066	✔
CK-CX-TF-T-A02	eC4-CK-CX-TF-T-A02-24-20-F1-L	F	24	11.50	20	14.30	15.60	2.80	N/A	0.40		eCA1067	✔
961A	eC4-961A-32-20-F1-L	F	32	14.20	20	15.24	21.13	6.60	N/A	0.40		eCA1072	✔
244C	eC4-244C-44-16-F1-L	F	44	20.20	16	8.51	25.50	6.60	N/A	0.40		eCA1073	✔
5812	eC4-5812-32-16-F1-L	F	32	14.20	16	8.51	21.13	6.60	N/A	0.40		eCA1074	✔
9JAXR5009	eN4-9JAXR5009-32-16-P1-L	P	32	14.20	16	7.35	13.80	5.20	3.60	0.40		eCA1076	✔
64004800	eC4-64001800-32-16-P1-L	P	32	14.20	16	12.80	18.90	7.70	5.90	0.40		eCA1077	✔
64003700	eC4-64003700-44-20-F1-L	F	44	20.20	20	17	26.50	7.90	N/A	0.40		eCA1083	✔
112934-1	eC5-112934-1-44-24-P1-L	P	44	20.20	24	14.25	22.32	13.80	10.05	0.50		eCA1106	✔
SR-21013	eC4-SR-21013-56-56-P1-L	P	56	26.20	56	37.90	37.10	5.50	5.10	0.40		eCA1117	✔
1533222-2	eN5-1533222-2-24-16-P1-L	P	24	11.50	16	6.10	16.00	7.55	6.55	0.50		eCA1132	✔
0220-8888-11	eC5-0220-8888-11-32-20-F1-L	F	32	14.20	20	13.46	18.16	10.67	N/A	0.50		eCA1141	✔
LVC-D22SFYGTP-1	eN4-LVC-D22SFYGTP-1-24-8-P1-L	P	24	11.50	8	3.90	15.30	4.00	3.00	0.40		eCA1143	✔
0220-0021-27	eC5-0220-0021-27-24-16-F1-L	F	24	11.50	16	9.65	12.70	7.24	N/A	0.50		eCA1144	✔
0220-4000-01	eC5-0220-4000-01-24-16-P1-L	P	24	11.50	16	9.40	13.00	5.33	5.08	0.50		eCA1149	✔
0220-0059-01	eC5-0220-0059-01-44-24-P1-L	P	44	20.20	24	12.52	28.07	9.14	7.60	0.50		eCA1158	✔

 Copyright © 1999-2020 ePAK International, Inc.

CONNECTOR(continued)

Device Type	Order Code	Style	W	F	P	AO	BO	KO	K1	T	22"	Drawing	Tool
831D01F20FC1003	eC5-831D01F20FC1003-44-20-P1-L	P	44	20.20	20	3.30	23.80	12.70	11.35	0.50		eCA1161	✔
99-0818-01	eN4-99-0818-01-24-16-F1-L	F	24	11.50	16	8.40	8.50	6.85		0.40		eCA1162	✔
99-T006	eC3-99-T006-12-8-F1-L	F	12	5.50	8	3.40	3.60	1.60		0.30		eCA1163	✔
9JAXA1002	eN4-9JAXA1002-44-36-P1-L	P	44	20	36	25.50	26.00	5.25	2.75	0.40		eCA1164	✔
TPK0065	eC5-TPK0065-24-16-P1-L	P	24	11.50	16	8.90	7.90	5.85	3.85	0.50		eCA1167	✔
D004743	eC3-D004743-02040B-44-20-P1-L	P	44	20.20	20	15.35	30.35	3.20	2.50	0.30		eCA1168	✔
0220-0206-24	eC4-0220-0206-24-24-8-F1-L	F	24	11.50	8	3.00	10.80	2.75		0.40		eCA1170	✔
TPK004709	eC4-TPK004709-44-16-F1-L	F	44	20.20	16	10.00	25.60	5.80		0.40		eCA1171	✔
5-912093-7	eN3-5-912093-7-24-8-F1-L	F	24	11.50	8	5.30	9.10	3.40		0.30		eCA1172	✔
CK-CX-TF-T-A04	eC4-CK-CX-TF-T-A04-24-20-P1-L	P	24	11.50	20	13.80	14.24	2.70	2.10	0.40		eCA1173	✔
1000028061-CTPK012	eC4-1000028061-CTPK012-12-8-F1-L	F	12	5.50	8	4.55	4.75	3.10		0.40		eCA1194	✔
TPK003510	eC4-TPK003510-44-16-F1-L	F	44	20.20	16	10.00	28.10	4.80		0.40		eCA1197	✔
TPK003502	eC4-TPK003502-24-16-F1-L	F	24	11.50	16	10.00	7.90	4.80		0.40		eCA1198	✔
TPK003503	eC4-TPK003503-24-16-F1-L	F	24	11.50	16	10.00	10.40	4.80		0.40		eCA1199	✔
7979642	eN4-7979642-0-24-8-P1-L	P	24	11.50	8	3.60	14.30	1.70	1.50	0.40		eCA1206	✔
1000029214-CTPK016	eC4-1000029214-CTPK016-16-12-F1-L	F	16	7.50	12	6.70	7.50	3.60		0.40		eCA1207	✔
SR-21097	eC5-SR-21097-104-72-F1-L	F	104	50.20	72	58.40	65.30	13.65		0.50		eCA1211	✔
ML414RH/F9CL	eN3-ML414RH/F9CL-16-8-P1-L	P	16	7.50	8	3.60	10.00	1.85		0.30		eCA1212	✔
CKCXTSTA07	eC3-CKCXTSTA07-24-24-P1-L	P	24	11.50	24	17.75	16.70	3.20	3.00	0.30		eCA1219	✔
1000029084-CTPK012	eC4-1000029084-CTPK012-12-8-F1-L	F	12	5.50	8	5.90	4.55	3.80		0.40		eCA1220	✔

 Copyright © 1999-2020 ePAK International, Inc.

CARRIER TAPE

CONNECTOR(continued)

Device Type	Order Code	Style	W	F	P	AO	BO	KO	K1	T	22"	Drawing	Tool
FK-TAP-002	eN4-FK-TAP-002-16-12-F1-L	F	16	7.50	12	6.40	6.70	5.25		0.40		eCA1221	✔
TPK006608	eC4-TPK006608-44-16-F1-L	F	44	20.20	16	8.90	22.70	5.85		0.40		eCA1228	✔
	eC3-3AE6K6P000001-24-16-F1-L	F	24	11.50	16	11.35	11.85	1.80		0.30		eCA1246	✔
	eC5-TPI005504-24-16-F1-L	F	24	11.50	16	13.30	12.10	9.50		0.50		eCA1249	✔
	eC5-TPI006906-32-16-F1-L	F	32	14.20	16	12.30	17.20	9.50		0.50		eCA1250	✔
	eN3-ML414RH/F90E-16-8-P1-L	P	16	7.50	8	3.90	5.85	2.45	1.85	0.30		eCA1251	✔
	eN5-ZC-276-12-8-F1-L	F	12	5.50	8	5.60	5.60	5.00		0.50		eCA1252	✔
	eN5-G6Z-32-16-F1-L	F	32	14.20	16	11.20	20.60	9.90		0.50		eCA1253	✔
	eC4-TPK004703-24-16-F1-L	F	24	11.50	16	10.00	10.40	5.80		0.40		eCA1254	✔
	eN4-G275-24-12-P1-L	P	24	11.50	12	7.30	11.90	4.70	2.30	0.40		eCA1256	✔
	eC3-3AE6K6P000002-24-16-F1-L	F	24	11.50	16	11.35	14.35	1.80		0.30		eCA1258	✔
	eC4-99-0965-00-24-16-F1-L	F	24	11.50	16	10.70	12.10	3.30		0.40		eCA1259	✔
	eN4-LVC-D10SYGTP-1-24-8-P1-L	P	24	11.50	8	3.90	10.30	4.00	3.00	0.40		eCA1260	✔
	eC4-99-0966-00-24-16-F1-L	F	24	11.50	16	10.50	12.00	5.20		0.40		eCA1262	✔
	eN4-DP3-155404-2-32-24-P1-L	P	32	14.20	24	15.40	17.40	3.35	2.65	0.40		eCA1263	✔
	eN5-99-0919-01-32-20-P1-L	P	32	14.20	20	10.90	13.00	10.50	10.10	0.50		eCA1264	✔
	eN4-99-0786-01-16-12-F1-L	F	16	7.50	12	8.60	8.90	5.20		0.40		eCA1265	✔
	eN3-99-0934-01-12-8-F1-L	F	12	5.50	8	4.75	4.95	2.00		0.30		eCA1266	✔
	eN3-99-0944-01-12-8-F1-L	F	12	5.50	8	3.05	3.25	1.70		0.30		eCA1267	✔
	eN3-99-0929-01-12-8-F1-L	F	12	5.50	8	3.05	3.25	1.30		0.30		eCA1269	✔
	eN3-99-0914-01-12-8-F1-L	F	12	5.50	8	3.35	3.35	1.70		0.30		eCA1270	✔
	eN3-99-0914-01-12-8-F1-L	F	12	5.50	8	4.25	4.25	1.40		0.30		eCA1271	✔
	eN5-XX-32-24-F1-L	F	32	14.20	24	13.80	14.60	13.60		0.50		eCA1272	✔

 Copyright © 1999-2020 ePAK International, Inc.

CARRIER TAPE

CONNECTOR(continued)

Device Type	Order Code	Style	W	F	P	AO	BO	KO	K1	T	22"	Drawing	Tool
	eN3-DP3-154322-0-24-8-F1-L	F	24	11.50	8	5.10	12.70	1.70		0.30		eCA1275	✔
	eN3-DP3-154323--5-24-8-F1-L	F	24	11.50	8	5.10	14.50	1.70		0.30		eCA1276	✔
	eC5-CKCXMUTA08-16-16-P1-L	P	16	7.50	16	9.00	7.00	7.50	4.25	0.50		eCA1278	✔
	eC4-FLXP-FCGIPD-991-32-16-P1-L	P	32	14.20	16	8.75	8.75	6.60	6.30	0.40		eCA1283	✔
	eN4-99-0968-0(1)-24-16-F1-L	F	24	11.50	16	8.40	8.50	6.10		0.40		eCA1284	✔
	eN4-99-0968-0(2)-16-12-F1-L	F	16	7.50	12	8.40	8.50	6.10		0.40		eCA1285	✔
	eC3-CKCXSIMCA08-32-20-P1-L	P	32	14.20	20	13.90	16.70	2.30	2.10	0.30		eCA1286	✔
	eN4-SS2368-32-16-P1-L	P	32	14.20	16	5.30	15.20	5.20	4.00	0.40		eCA1289	✔
	eC4-TPPZ0001-56-56-P1-L	P	56	26.20	56	45.00	36.50	5.80	4.65	0.40		eCA1290	✔
	eC3-POWERMITE-01-12-4-F1-L	F	12	5.50	4	2.00	5.15	1.20		0.30		eCA1292	✔
	eC3-1-3SEG-S2JP15-16-12-F1-L	F	16	7.50	16	8.65	8.35	1.40		0.30		eCA1293	✔
	eC3-POWERMITE-03-16-8-F1-L	F	16	7.50	8	4.30	7.90	1.35		0.30		eCA1294	✔
	eC4-6-68-0056-00-24-12-F1-L	F	24	11.50	12	3.40	11.30	2.40		0.40		eCA1298	✔
	eN4-XF2W-3905497-8-44-8-P1-L	P	44	20.20	8	3.60	34.30	2.37	2.17	0.40		eCA1299	✔
	eN4-XF3H-9979681-7-32-8-F1-L	F	32	14.20	8	3.58	18.78	1.10		0.40		eCA1300	✔
	eN4-XF3H-3H61-32-8-F1-L	F	32	14.20	8	3.58	19.98	1.10		0.40		eCA1301	✔
	eN4-XF2M-6914217-0-44-12-F1-L	F	44	20.20	12	6.20	30.00	3.30		0.40		eCA1302	✔
	eN4-XF2M-6914215-4-44-12-F1-L	F	44	20.20	12	6.20	25.00	3.30		0.40		eCA1303	✔
	eN4-XF2M-7906717-7-44-12-F1-L	F	44	20.20	12	6.20	27.50	3.30		0.40		eCA1304	✔
	eC3-TPK00724P-16-12-P1-L	P	16	7.50	12	7.50	7.00	2.20	1.70	0.30		eCA1313	✔
	eC3-TPK00728P-24-12-P1-L	P	24	11.50	12	7.50	12.10	2.20	1.70	0.30		eCA1314	✔
	eC5-1706285-1-44-20-P1-L	P	44	20.20	20	7.75	14.74	10.88	9.38	0.50		eCA1315	✔
	eC5-1706284-1-44-28-P1-L	P	44	20.20	28	18.78	22.86	13.96	9.66	0.50		eCA1316	✔
	eN4-9JAXA2R001-44-36-P1-L	P	44	20.20	36	30.65	28.45	6.20	3.10	0.50		eCA1317	✔

Copyright © 1999-2020 ePAK International, Inc.

CONNECTOR(continued)

Device Type	Order Code	Style	W	F	P	AO	BO	KO	K1	T	22"	Drawing	Tool
	eN3-XF2S-2S45-32-8-F1-L	F	32	14.20	8	5.20	18.80	0.75		0.30		eCA1319	✔
	eC3-CKCXTFTA12-24-16-P1-L	P	24	11.50	16	12.20	12.50	2.50	2.30	0.30		eCA1322	✔
	eN4-99-0976-01-24-16-F1-L	F	24	11.50	16	10.60	10.60	5.20		0.40		eCA1326	✔
	eN4-99-0978-01-24-16-F1-L	F	24	11.50	16	10.60	10.60	4.20		0.40		eCA1327	✔
	eN3-Nypro-16-16-F1-L	F	16	7.50	16	6.55	6.60	2.50		0.30		eCA1328	✔
	eN4-99-0986-01-24-8-F1-L	F	24	11.50	8	4.10	12.40	3.95		0.40		eCA1332	✔
	eC3-3AE3K3P000003-16-12-F1-L	F	16	7.50	12	8.85	8.85	1.40		0.30		eCA1333	✔
	eC5-SM-173-32-20-F1-L	F	32	14.20	20	15.40	15.40	5.40		0.50		eCA1334	✔
	eC4-7090-16-12-F1-L	F	16	7.50	12	7.60	9.40	5.00		0.40		eCA1335	✔
	eC3-TK-0027-12-8-F1-L	F	12	5.50	8	5.20	2.80	1.60		0.30		eCA1336	✔
	eN4-XF2U-7979643-8-24-8-P1-L	P	24	11.50	8	3.60	17.30	1.70	1.50	0.40		eCA1337	✔
	eN4-XF2U-9979928-0-16-8-P1-L	P	16	7.50	8	3.60	6.30	1.70	1.50	0.40		eCA1338	✔
	eN4-XF2U-9951191-0-16-8-P1-L	P	16	7.50	8	3.60	7.80	1.70	1.50	0.40		eCA1339	✔
	eN4-XF2W-W16-24-8-P1-L	P	24	11.50	8	3.60	10.30	1.77	1.57	0.40		eCA1340	✔
	eN3-99-0901-01-12-8-F1-L	F	12	5.50	8	3.05	3.25	2.00		0.30		eCA1341	✔
	eC4-99-0981-00-12-8-F1-L	F	12	5.50	8	5.30	5.30	3.30		0.40		eCA1346	✔
	eC4-99-0982-00-16-12-F1-L	F	16	7.50	12	7.00	7.80	4.30		0.40		eCA1347	✔
	eC3-S2NA20-16-8-F1-L	F	16	7.50	8	6.25	7.75	1.40		0.30		eCA1349	✔
	eN4-F4DSDR-12-8-F1-L	F	12	5.50	8	5.50	5.40	2.30		0.40		eCA1352	✔
	eC4-TPK0071-44-16-F1-L	F	44	20.20	16	10.00	22.70	6.60		0.40		eCA1354	✔
	eN4-9JAXA2R002-44-36-P1-L	P	44	20.20	36	31.37	28.55	6.20	3.80	0.40		eCA1355	✔

 Copyright © 1999-2020 ePAK International, Inc.

CARRIER TAPE

CONNECTOR(continued)

Device Type	Order Code	Style	W	F	P	AO	BO	KO	K1	T	22"	Drawing	Tool
	eC5-EP13-32-24-P1-L	P	32	14.20	24	13.80	19.50	12.79	10.95	0.50		eCA1405	✔
	eN4-2-912144-2-24-16-P1-L	P	24	11.50	16	8.70	16.50	11.00	7.80	0.40		eCA1416	✔
	eN4-M10-7906720-7-24-12-F1-L	F	24	11.50	12	5.10	10.00	3.30		0.40		eCA1421	✔
	eN4-M18-7942686-0-24-12-F1-L	F	24	11.50	12	5.10	14.00	3.30		0.40		eCA1422	✔
	eN5-99-1007-01-32-20-P1-L	P	32	14.20	20	11.80	16.10	10.50	10.20	0.50		eCA1423	✔
	eC3-PCB-32-16-P1-L	P	32	14.20	16	11.00	21.30	4.40	3.80	0.30		eCA1426	✔
	eN4-XF2W-W20-3905500-1-24-8-P1-L	P	24	11.50	8	3.60	12.30	1.77	1.57	0.40		eCA1428	✔
	eN4-XF2W-W24-3905499-4-24-8-P1-L	P	24	11.50	8	3.60	14.30	1.77	1.57	0.40		eCA1429	✔
	eN4-XF2U-U18-7960758-9-24-8-P1-L	P	24	11.50	8	3.60	11.30	1.70	1.50	0.40		eCA1430	✔
	eN3-XF3D-0915-9026764-1-16-12-P1-L	P	16	7.50	12	4.35	8.00	2.59	2.39	0.30		eCA1434	✔
	eN4-XF2W-W18-4324693-8-24-8-P1-L	P	24	11.50	8	3.60	11.30	1.77	1.57	0.40		eCA1443	✔
	eN4-XF3H31-9988439-2-24-8-F1-L	F	24	11.50	8	3.58	10.98	1.10		0.40		eCA1465	✔
	eN4-XF3H35-9979679-5-24-8-F1-L	F	24	11.50	8	3.58	12.18	1.10		0.40		eCA1466	✔
	eN4-XF3H45-9988369-8-24-8-F1-L	F	24	11.50	8	3.58	15.18	1.10		0.40		eCA1467	✔
	eN4-XF3H51-9988373-6-24-8-F1-L	F	24	11.50	8	3.58	16.98	1.10		0.40		eCA1468	✔
	eN4-XF3H41-1182255-4-24-8-F1-L	F	24	11.50	8	3.58	13.98	1.10		0.40		eCA1473	✔
	eC4-1000041537-CTPK001-16-12-F1-L	F	16	7.50	12	6.80	8.30	5.60		0.40		eCA1492	✔
	eC4-1533254-3-24-8-F1-L	F	24	11.50	8	5.30	9.80	3.80		0.40		eCA1495	✔
	eC4-1533254-1-24-8-F1-L	F	24	11.50	8	4.80	9.80	5.30		0.40		eCA1496	✔
	eC4-1-1533254-5-24-8-F1-L	F	24	11.50	8	4.10	9.80	4.80		0.40		eCA1497	✔
	eC4-1000041602-CTPK012-12-08-F1-L	F	12	5.50	8	5.60	4.90	3.90		0.40		eCA1501	✔

Copyright © 1999-2020 ePAK International, Inc.

CONNECTOR(continued)

Device Type	Order Code	Style	W	F	P	AO	BO	KO	K1	T	22"	Drawing	Tool
	eC4-1000041624-CTPK044-44-24-F1-L	F	44	20.20	24	15.80	30.30	3.40		0.40		eCA1502	✔
	eN4-G6L-5989374-7-24-12-F1-L	F	24	11.50	12	8.90	11.20	4.60		0.40		eCA1504	✔
	eN5-G6Z-7479560-3-32-16-F1-L	F	32	14.20	16	10.30	20.60	10.00		0.50		eCA1505	✔
	eC4-719D00000-56-20-P1-L	P	56	26.20	20	11.58	39.78	6.60		0.40		eCA1506	✔
	eN4-99-1001-00-16-12-F1-L	F	16	7.50	12	7.40	9.40	5.20		0.40		eCA1511	✔
	eC4-1000039107-CTPK012-12-08-F1-L	F	12	5.50	8	4.10	4.20	3.40		0.40		eCA1513	✔
	eC2.5-506-CARLV1-01-8-4-F1-L	F	8	3.50	4	3.05	3.63	2.16		0.25		eCA1655	✔
	eC3-3CP50657-12-8-F1-L	F	12	5.50	8	6.85	7.40	1.90		0.30		eCA1688	✔
	eN4-99-G-23307B-12-8-F1-L	F	12	5.50	8	5.20	4.20	3.50		0.40		eCA1690	✔
	eC3-4.505-12-8-F1-L	F	12	5.50	8	4.75	5.25	1.25		0.30		eCA1694	✔
	eC3-4.65.2-12-8-F1-L	F	12	5.50	8	4.85	5.45	1.00		0.30		eCA1697	✔
	eC3-S180-12-8-F1-L	F	12	5.50	8	3.10	5.10	1.20		0.30		eCA1698	✔
	eC4-AF64-24-16-P1-L	P	24	11.50	16	8.75	8.75	6.35	3.00	0.40		eCA1699	✔
	eC2.5-CTM302-8-4-F1-L	F	8	3.50	4	2.70	2.70	1.75		0.25		eCA1705	✔
	eN4-99-G-24228-24-16-F1-L	F	24	11.50	16	10.50	12.10	4.30		0.40		eCA1714	✔
	eN4-99-G-24285-24-16-F1-L	F	24	11.50	16	10.20	11.80	4.30		0.40		eCA1717	✔
	eN4-99-1083-01-16-12-F1-L	F	16	7.50	12	6.30	6.30	5.10		0.40		eCA1721	✔
	eC2-1.55X1.5X1.0-8-4-F1-L	F	8	3.50	4	1.60	1.65	1.30		0.20		eCA1724	✔
	eN4-D2LS-2267326-7-24-8-P1-L	P	24	11.50	8	5.20	11.60	4.70	3.85	0.40		eCA1726	✔
	eC3-MSC-7392-16-12-P1-L	P	16	7.50	12	9.27	9.27	1.50	1.20	0.30		eCA1734	✔
	eC3-MSC-5912-12-8-P1-L	P	12	5.50	8	6.90	5.40	1.50	1.20	0.30		eCA1735	✔

 Copyright © 1999-2020 ePAK International, Inc.

CARRIER TAPE

CONNECTOR(continued)

	eN4-99-1082-01-24-16-F1-L	F	24	11.50	16	12.30	12.30	3.60		0.40		eCA1736	✔
	eN4-XF2B-31P-24-12-P1-L	P	24	11.50	12	5.91	11.40	2.40	2.20	0.40		eCA1740	✔
	eN4-XF2B-33P-24-12-P1-L	P	24	11.50	12	5.91	12.00	2.40	2.20	0.40		eCA1741	✔
	eN4-XF2B-45P-24-12-P1-L	P	24	11.50	12	5.91	15.60	2.40	2.20	0.40		eCA1742	✔
	eN4-XF2B-51P-24-12-P1-L	P	24	11.50	12	5.91	17.40	2.40	2.20	0.40		eCA1743	✔
	eC3-506-CARS6P-01-12-8-P1-L	P	12	5.50	8	4.00	3.70	2.20		0.30		eCA1744	✔
	eC2.5-506-CARSTP-01-8-4-F1-L	F	8	3.50	4	2.20	3.30	1.50		0.25		eCA1745	✔
	eC2-3528-8-4-F2-L	F2	8	3.50	4	3.05	3.75	1.10		0.20		eCA1746	✔
	eC3-485-CTM301-77-8-4-F1-L	F	8	3.50	4	3.00	3.00	2.70		0.30		eCA1747	✔
	eN4-XF2B-27P-24-12-P1-L	P	24	11.50	12	5.91	10.20	2.40	2.20	0.40		eCA1754	✔
	eN4-XF2B-35P-24-12-P1-L	P	24	11.50	12	5.91	12.60	2.40	2.20	0.40		eCA1755	✔
	eN4-XF2B-21P-16-12-P1-L	P	16	7.50	12	5.91	8.40	2.40	2.20	0.40		eCA1756	✔
	eC3-EQ/EQG 14.0X14.0X1.4-32-24-P1-L	P	32	14.20	24	17.50	17.50	1.88	1.58	0.30		eCA1768	✔
	eN4-99-G-24691-24-16-P1-L	P	24	11.50	16	11.65	13.60	4.00		0.40		eCA1771	✔
	eN5-99-1074-01-24-16-F1-L	F	24	11.50	16	12.90	12.90	8.00		0.50		eCA1779	✔
	eN5-99-1078-01-24-16-F1-L	F	24	11.50	16	12.60	12.60	8.60		0.50		eCA1780	✔
	eC2.5-2520-1.3CN-8-4-F1-L	F	8	3.50	4	2.20	2.75	1.30		0.25		eCA1782	✔
	eC3-P8-282-P16-12-8-F1-L	F	12	5.50	8	6.55	5.35	2.10		0.30		eCA1783	✔
	eC3-P8-169-P24-16-12-P1-L	P	16	7.50	12	7.00	8.20	1.55	1.30	0.30		eCA1784	✔
	eC3-P8-302-N16-12-8-F1-L	F	12	5.50	8	3.35	3.35	1.20		0.30		eCA1787	✔
	eC3-P8-347-N20-12-8-F1-L	F	12	5.50	8	4.35	4.35	1.10		0.30		eCA1788	✔
	eC3-P8-248-P20-16-8-F1-L	F	16	7.50	8	6.50	9.50	2.10		0.30		eCA1789	✔
	eC3-P8-277-D48-16-8-F1-L	F	16	7.50	8	6.55	10.38	2.10		0.30		eCA1790	✔

 Copyright © 1999-2020 ePAK International, Inc.

CONNECTOR(continued)

	eC5-TRP2F-72-32-F1-L	F	72	34.20	32	23.80	48.30	9.50		0.50		eCA1792	✔
	eC3-P8-321-P28-24-12-P1-L	P	24	11.50	12	8.90	10.60	2.30	2.00	0.30		eCA1793	✔
	eC3-P8-330-P48-24-12-P1-L	P	24	11.50	12	7.10	10.10	1.30	1.50	0.30		eCA1794	✔
	eC2.5-P8-293-PG8-12-8-P1-L	P	12	5.50	8	6.90	3.45	1.50	1.15	0.25		eCA1803	✔
	eC3-P8-320-P20-16-12-P1-L	P	16	7.50	12	8.60	7.60	2.30	2.00	0.30		eCA1804	✔
	eN4-99-G-25108-24-20-F1-L	F	24	11.50	20	15.00	15.00	4.00		0.40		eCA1805	✔

 Copyright © 1999-2020 ePAK International, Inc.

CARRIER TAPE

COIL

Device Type	Order Code	Style	W	F	P	AO	BO	KO	K1	T	22"	Drawing	Tool
Coil	eN5-D195H00-16-8-P1	P	16	7.5	8	6.4	7.4	3.4	2.7	1		eCA0002	✔
Coil	eN5-D195E00-16-8-P1	P	16	7.5	8	5.7	7.4	2.4	1.7	1		eCA0003	✔
Coil	eN4-BLS-12-8-F1	F	12	5.5	8	4.6	5.8	3.2	N/A	0		eCA0004	✔
Coil	eN4-7MDCH2-16-12-F1	F	16	7.5	12	9.2	7.2	4.5	N/A	0		eCA0005	✔
Coil	eN4-950176-24-8-P1	P	24	12	8	5.9	12	2.3	1.6	0		eCA0007	✔
Coil	eC5-SDS0604-16-12-F1	F	16	7.5	12	6.9	6.9	5.1	N/A	1		eCA0021	✔
Coil	eC5-SD1208-24-20-P1	P	24	12	20	13.1	13.1	8.3	7.9	1		eCA0022	✔
Coil	eN4-4BLS2-12-8-F1	F	12	5.5	8	5.4	5.8	4.5	N/A	0		eCA0039	✔
Coil	eC4-SDS0906-24-16-F-L	F	24	12	16	12.9	10.4	6.5	N/A	0		eCA0055	✔
Coil	eN4-TER-14.5-24-20-F1-L	F	24	12	20	15.5	17	7.3	N/A	0		eCA0061	✔
Coil	eN4-TER-11-24-16-F1-L	F	24	12	16	13.3	11.8	6.2	N/A	0		eCA0067	✔
Coil	eC5-SE1106-24-16-P1-L	P	24	12	16	13.7	13.6	6.6	N/A	1		eCA0106	✔
Coil	eC4-SDR1006-24-12-P1-L	P	24	12	12	10.5	10.5	5.9	4.8	0		eCA0111	✔
Coil	eC3-TPK000108-24-12-P1-L	P	24	12	12	8.9	12.1	3	N/A	0		eCA0113	✔
Coil	eC4-TPK003508-44-16-F1-L	F	44	20	16	10	22	4.8	N/A	0		eCA0115	✔
Coil	eC4-TPK003504-24-16-F1-L	F	24	12	16	10	12.9	4.8	N/A	0		eCA0116	✔
Coil	eN4-SDS1005-24-16-F1-L	F	24	12	16	10.4	13.2	5.3	N/A	0		eCA0123	✔
Coil	eN4-5MDC-12-8-F1-L	F	12	5.5	8	5.5	5.9	5.2	N/A	0		eCA0124	✔
Coil	eN5-2225-00680-16-8-P1-L	P	16	7.5	8	4.6	8.1	5	N/A	1		eCA0132	✔
Coil	eN5-2225-01480-24-12-P1-L	P	24	12	12	3.4	11.2	5.8	4.8	1		eCA0133	✔
Coil	eN5-912051-1-16-12-P1-L	P	16	7.5	12	5.9	8	5.5	4.3	1		eCA0149	✔
Coil	eN5-912051-2-16-12-P1-L	P	16	7.5	12	5.9	9.25	5.5	4.3	1		eCA0150	✔
Coil	eN5-912051-4-16-12-P1-L	P	16	7.5	12	5.9	10.5	5.5	4.3	1		eCA0151	✔
Coil	eN5-912055-1-16-12-P1-L	P	16	7.5	12	5.9	5.5	5.5	4.3	1		eCA0153	✔

Copyright © 1999-2020 ePAK International, Inc.

CARRIER TAPE

COIL(continued)

Device Type	Order Code	Style	W	F	P	AO	BO	KO	K1	T	22"	Drawing	Tool
Coil	eC3-SSO403-12-8-F1-L	F	12	5.5	8	4.4	6.75	2.9	N/A	0		eCA0154	✔
Coil	eN2.5-075-09811-8-4-F1-L	F	8	3.5	4	1.12	1.73	1	N/A	0		eCA0156	✔
Coil	eC4-TP-K-0034-0-32-16-F1-L	F	32	14	16	11.2	12.9	4.8	N/A	0		eCA0164	✔
Coil	eN5-912055-4-24-12-P1-L	P	24	12	12	5.9	11.8	7	5.8	1		eCA0208	✔
Coil	eN5-912061-6-24-12-P1-L	P	24	12	12	5.5	9.25	7.4	6.3	1		eCA0210	✔
Coil	eN4-TB055-0400-44-36-P1-L	P	44	20	36	28	33	3.4	N/A	0		eCA0212	✔
Coil	eN4-TB064-0400-44-36-P1-L	P	44	20	36	31	30.4	5	N/A	0		eCA0213	✔
Coil	eC4-912096-2-56-52-P1-L	P	56	26	52	43.8	36.3	5.1	N/A	0		eCA0214	✔
Coil	eC3-S044-44-24-P1-L	P	44	20	24	16.6	28.9	3.5	2.7	0		eCA0215	✔
Coil	eC3-SO44-44-24-P1-L	P	44	20	24	16.6	28.9	3.5	2.7	0		eCA0215	✔
Coil	eN5-623237-1-24-12-P1-L	P	24	12	12	6.8	10.2	7.1	6.3	1		eCA0220	✔
Coil	eC3-TO-263-24-12-P1-L	P	24	12	12	10.7	16.7	5	4.8	0		eCA0224	✔
Coil	eC3-TO-263-24-12-P1-L	P	24	12	12	10.7	16.7	5	4.8	0		eCA0224	✔
Coil	eC3-DPAK-16-8-P1-L	P	16	7.5	8	6.9	10.5	2.9	2.6	0		eCA0225	✔
Coil	eC3-DPAK-16-8-P1-L	P	16	7.5	8	6.9	10.5	2.9	2.6	0		eCA0225	✔
Coil	eC3-MFP16P-16-8-F1-L	F	16	7.5	8	6.9	8.9	2.1	N/A	0		eCA0238	✔
Coil	eN5-Z070672-00-44-20-P1-L	P	44	N/A	20	6.5	20.5	8.2	7.6	1		eCA0241	✔
Coil	eN5-TET32K-32-24-F1-L	F	32	14	24	13.4	18	13	N/A	1		eCA0246	✔
Coil	eN3-D0303-16-8-P1-L	P	16	7.5	8	6	9	2	N/A	0		eCA0248	✔
Coil	eN4-TB028-0400-56-48-P1-L	P	56	26	48	20.7	35.2	5.8	N/A	0		eCA0249	✔
Coil	eC4-912096-5-56-56-P1-L	P	56	26	56	43.8	36.3	5.1	N/A	0		eCA0251	✔
Coil	eN4-TB100-0400-32-28-P1-L	P	32	14	28	22	19	5.4	4.8	0		eCA0252	✔
Coil	eN4-623244-1-44-12-P1-L	P	44	20	12	7.86	29	5.1	N/A	0		eCA0256	✔
Coil	eN5-623243-1-44-16-P1-L	P	44	20	16	6.95	26.8	13	N/A	1		eCA0257	✔

 Copyright © 1999-2020 ePAK International, Inc.

CARRIER TAPE

COIL(continued)

Device Type	Order Code	Style	W	F	P	AO	BO	KO	K1	T	22"	Drawing	Tool
Coil	eN4-912095-4-44-20-P1-L	P	44	20	20	14.7	25.3	9	7.7	0		eCA0258	✔
Coil	eN4-623238-1-56-12-P1-L	P	56	26	12	7.9	43.3	6.4	N/A	0		eCA0259	✔
Coil	eC3-XCT05A-24-16-P1-L	P	24	12	16	13	14.4	3.8	N/A	0		eCA0267	✔
Coil	eN4-TB103-0400-56-32-P1-L	P	56	26	32	27	34.4	8.1	N/A	0		eCA0268	✔
Coil	eN4-912097-1-72-12-P1-L	P	72	34	12	6.5	49	5.1	N/A	0		eCA0274	✔
Coil	eN4-912095-5-44-12-P1-L	P	44	20	12	6.5	25	5.1	N/A	0		eCA0275	✔
Coil	eC4-ACM6022B-T01B-24-20-P1-L	P	24	12	20	8.3	8.3	6.5	4.4	0		eCA0276	✔
Coil	eC4-DVC-24-12-F1-L	F	24	12	12	9.6	14.7	5.6	N/A	0		eCA0279	✔
Coil	eN4-912094-4-32-12-P1-L	P	32	14	12	6.5	22	7.1	N/A	0		eCA0280	✔
Coil	eN4-912094-5-32-12-P1-L	P	32	14	12	6.5	22	4.6	N/A	0		eCA0281	✔
Coil	eN5-S9-20063E-00-16-8-F1-L	F	16	7.5	8	3.6	5.6	5.8	N/A	1		eCA0285	✔
Coil	eC5-96-POCK-0080-24-12-F1-L	F	24	12	12	7	14.7	5.5	N/A	1		eCA0286	✔
Coil	eC4-F408-OA-SMLF-38-24-8-F1-L	F	24	12	8	3.6	10.6	3.8	N/A	0		eCA0298	✔
Coil	eN4-7-0912073-5-24-12-P1-L	P	24	12	12	6.8	16.3	4.1	3.3	0		eCA0309	✔
Coil	eC5-96-POCK-0073-44-20-F1-L	F	44	20	20	15.4	22.5	7.8	N/A	1		eCA0317	✔
Coil	eC3-TO-263-24-12-P2-L	P	24	12	12	10.5	16.3	4.9	4.7	0		eCA0335	✔
Coil	eN3-0-912094-7-32-8-F1-L	F	32	14	8	4.2	18.5	2	N/A	0		eCA0338	✔
Coil	eN4-TS-1112EM-16-8-PI-L	P	16	7.5	8	5.8	8.2	4.7	3.7	0		eCA0339	✔
Coil	eN3-0-912092-3-12-8-F1-L	F	12	5.5	8	4.2	6	1.7	N/A	0		eCA0340	✔
Coil	eC4-623269-1-56-8-P1-L	P	56	26	8	3.55	6.1	3	N/A	0		eCA0343	✔
Coil	eC5-96-POCK-0085-16-12-FI-L	F	16	7.5	12	6.4	8.3	4.3	N/A	1		eCA0346	✔
Coil	eC4-GKT8.870.018-24-16-F1-L	F	24	12	16	8.9	8.9	3.6	N/A	0		eCA0351	✔
Coil	eC5-96-POCK-0086-44-24-P1-L	P	44	20	24	14.8	27.8	6.6	6.1	1		eCA0352	✔
Coil	eC4-MPT15-24-24-P1-L	P	24	12	24	16.1	16.1	7.8	6.9	0		eCA0359	✔

Copyright © 1999-2020 ePAK International, Inc.

COIL(continued)

Device Type	Order Code	Style	W	F	P	AO	BO	KO	K1	T	22"	Drawing	Tool
Coil	eN4-950252-56-44-P1-L	P	56	26	44	36.5	35.2	4.2	N/A	0		eCA0379	✔
Coil	eN3-3S-960132-7-12-8-F1-L	F	12	5.7	8	5	7.2	2.9	N/A	0		eCA0383	✔
Coil	eN4-99-0772-24-16-F1-L	F	24	12	16	10.5	10.5	6.9	N/A	0		eCA0436	✔
Coil	eN4-99-0740-24-16-F1-L	F	24	12	16	12.9	12.9	6.9	N/A	0		eCA0437	✔
Coil	eC3-TO-263-24-16-P3-L	P	24	12	16	10.6	16.5	4.9	4.7	0		eCA0451	✔
Coil	eN4-99-0795-01-24-8-F1-L	F	24	12	8	4.3	12.6	3.6	N/A	0		eCA0474	✔
Coil	eC3-W202-103-16-12-P1-L	P	16	7.5	12	10.2	6.9	2.8	2.6	0		eCA0489	✔
Coil	eC3-W202-105-16-8-P1-L	P	16	7.5	8	6.9	10.5	2.7	2.5	0		eCA0493	✔
Coil	eN4-99-0440-12-8-F1-L	F	12	5.5	8	5.5	5.4	3.6	N/A	0		eCA0495	✔
Coil	eN4-99-0417-12-8-F1-L	F	12	5.5	8	5.4	4.4	3.5	N/A	0		eCA0497	✔
Coil	eN3-99-0654-12-12-F1-I	F	12	12	12	6.2	6.3	3.3	N/A	0		eCA0498	✔
Coil	eN4-99-0456-16-12-F1-I	F	16	7.5	12	7.8	7.8	5.4	N/A	0		eCA0499	✔
Coil	eN4-99-0457-16-12-F1-L	F	16	7.5	12	7.8	7.8	6.4	N/A	0		eCA0500	✔
Coil	eN4-99-0467-16-12-F1-L	F	16	12	12	6.9	6.4	4.6	N/A	0		eCA0501	✔
Coil	eN4-99-0711-01-12-12-F1-L	F	12	5.5	12	6.2	6.3	3.8	N/A	0		eCA0502	✔
Coil	eN4-99-0579-24-16-F1-L	F	24	12	16	9.8	11.4	5.4	N/A	0		eCA0503	✔
Coil	eN4-99-0677-24-16-F1-L	F	24	16	16	12.4	13	4.9	N/A	0		eCA0504	✔
Coil	eC4-1000015654-44-24-F1-L	F	44	20	24	17.9	26.4	5	N/A	0		eCA0513	✔

 Copyright © 1999-2020 ePAK International, Inc.

COIL(continued)

Device Type	Order Code	Style	W	F	P	AO	BO	KO	K1	T	22"	Drawing	Tool
Coil	eN3-0793-01-12-8-F1-L	F	12	5.5	8	4.9	4.9	1.4	N/A	0		eCA0521	✔
Coil	eN3-6-68-0039-00-12-8-F1-L	F	12	5.5	8	3.5	3.8	2.4	N/A	0		eCA0541	✔
Coil	eN4-99-0708-01-12-8-F1-L	F	12	5.5	8	5.3	5.3	2.4	N/A	0		eCA0597	✔
Coil	eN4-99-0709-01-12-8-F1-L	F	12	5.5	8	5.3	5.3	3.4	N/A	0		eCA0598	✔
Coil	eN4-99-0649-01-12-8-F1-L	F	12	5.5	8	5.5	5.4	2.6	N/A	0		eCA0599	✔
Coil	eN4-tb138-0400-32-28-P1-L	P	32	14	28	22	19	5.6	5.1	0		eCA0600	✔
Coil	eC3-TK-0021-12-4-F1-L	F	12	5.5	4	2.3	3.2	1.6	N/A	0		eCA0601	✔
Coil	eN4-99-0754-01-12-8-F1-L	F	12	5.5	8	5.6	6	2.2	N/A	0		eCA0602	✔
Coil	eN4-99-0788-01-12-8-F1-L	F	12	5.5	8	5.6	6	2	N/A	0		eCA0603	✔
Coil	eN3-SB1R95F2R14B-16-8-F1-L	F	16	7.5	8	4.7	9.5	2.2	N/A	0		eCA0607	✔
Coil	eN4-99-G0015-24-8-F1-L	F	24	11.50	8	3.70	12	3.10	N/A	0.40		eCA0613	✔
Coil	eN3-99-0863-01-12-8-F1-L	F	12	5.50	8	4.25	4.25	2	N/A	0.30		eCA0620	✔
Coil	eN3-99-0864-01-12-8-F1-L	F	12	5.50	8	4.25	4.25	2.20	N/A	0.30		eCA0621	✔
Coil	eC2-441037-00-8-4-F1-L	F	8	3.5	4	0.93	1.75	0.9	N/A	0		eCA0637	✔
CSRW1302	eC3-CSRW1302-24-20-P1-L	P	24	11.50	20	12.80	12.80	2.40	1.60	0.30		eCA0882	✔
CDJL7ERS	eC5-CDJL7ERS-24-16-P1-L	P	24	11.50	16	8.56	9.60	7.15	6.35	0.50		eCA0896	✔

 Copyright © 1999-2020 ePAK International, Inc.

CARRIER TAPE

COIL(continued)

Device Type	Order Code	Style	W	F	P	AO	BO	KO	K1	T	22"	Drawing	Tool
99-0887-01	eN3-99-0887-01-12-8-F1-L	F	12	5.50	8	3.25	3.25	2.00	N/A	0.30		eCA1004	✔
99-0888-01	eN3-99-0888-01-12-8-F1-L	F	12	5.50	8	3.25	3.25	2.20	N/A	0.30		eCA1005	✔
99-0829-01	eN4-99-0829-01-24-20-F1-L	F	24	11.50	20	16.40	16.40	4.10	N/A	0.40		eCA1038	✔
99-0301-02	eN4-99-0301-02-12-8-F1-L	F	12	5.50	8	5.20	6.40	4.90	N/A	0.40		eCA1040	✔
99-0299-02	eN4-99-0299-02-16-8-F1-L	F	16	7.50	8	6.40	10.10	4.90	N/A	0.40		eCA1070	✔
99-0300-02	eN4-99-0300-02-24-8-F1-L	F	24	11.50	8	6.40	14.75	4.90	N/A	0.40		eCA1071	✔
99-0909-00	eC4-99-0909-00-24-16-F1-L	F	24	11.50	16	12.90	14.70	6.30	N/A	0.40		eCA1080	✔
99-0926-00	eC4-99-0926-00-24-16-F1-L	F	24	11.50	16	12.90	14.70	5.30	N/A	0.40		eCA1081	✔
99-0933-01	eN3-99-0933-01-12-8-F1-L	F	12	5.50	8	4.75	4.95	1.60		0.30		eCA1226	✔
99-0910-01	eN3-99-0910-01-12-8-F1-L	F	12	5.50	8	3.05	3.25	1.40		0.30		eCA1227	✔

 Copyright © 1999-2020 ePAK International, Inc.

CARRIER TAPE

CAPACITOR

Device Type	Order Code	Style	W	F	P	AO	BO	KO	K1	T	22"	Drawing	Tool
010x10.5L	eN4-010x10.5L-24-16-F1-L	F	24	11.50	16	10.70	11.90	11	N/A	0.40		eCA0118	✔
04X5.3L	eN4-04X5.3L-12-8-F1-L	F	12	5.50	8	4.70	6.10	5.70	N/A	0.40		eCA0112	✔
05x5.3L	eN4-05X5.3L-12-8-F1-L	F	24	11.50	16	8.70	8.90	11	N/A	0.40		eCA0121	✔
06.3X7.7L	eN4-06.3X7.7L-16-12-F1-L	F	16	7.50	12	7	7	8.30	N/A	0.40		eCA0117	✔
08x10.5L	eN4-08X10.5L-24-16-F1-L	F	24	11.50	16	8.70	8.90	11	N/A	0.40		eCA0119	✔

OTHERS

Device Type	Order Code	Style	W	F	P	AO	BO	KO	K1	T	22"	Drawing	Tool
Custom	eC4-NEW-SLIDING-SIM-24-24-P1-L	P	24	11.50	24	14.20	16.60	3.70	3.40	0.40		eCA0664	✔
Custom	eC3-Cameraring-24-20-p1-l	p	24	11.50	20	13	13	1.60	1.20	0.30		eCA0689	✔
Custom	eC3-SIDEKEYS-44-12-P1-L	P	44	20.20	12	3.70	25.70	2.60	1.90	0.30		eCA0690	✔
Custom	eC3-JOYSTICK-KNOB-24-20-P1-L	P	24	11.50	20	10	10	4.10	2.70	0.30		eCA0691	✔
Custom	EN3-PT-1630-SK08-HTF-16-8-P1-L	P	16	7.50	8	4	8.90	2.70	2	0.30		eCA0648	✔
Custom	eC4-DIS68489-16-12-P1-L	P	16	7.50	12	7.70	7.70	5.55	4.10	0.40		eCA0784	✔
SR-20892	eC4-SR-20892-56-56-F1-L	F	56	26.20	56	41	38.40	5.70	N/A	0.40		eCA1008	✔
SR-20946	eC4-SR20946-56-56-F1-L	F	56	26.20	56	37.40	39	5.60	N/A	0.40		eCA1055	✔
SR-20947	eC4-SR-20947-16-12-P1-L	P	16	7.50	12	4.10	8.20	5.10	3.70	0.40		eCA1026	✔
MOSP 10 LD	EC3-MSOP 10LD-12-8-P1-L	P	12	5.50	8	5.40	3.40	1.40	1.10	0.30		eCA1498	

Copyright © 1999-2020 ePAK International, Inc.

CARRIER TAPE

SWITCH

Device Type	Order Code	Style	W	F	P	AO	BO	KO	K1	T	22"	Drawing	Tool
Switch	eC4-TP-K-0047-4P-24-16-F1	F	24	11.50	16	10	12.90	5.80	N/A	0.40		eCA0013	✔
Switch	eC4-TP-K-0047-8P-44-16-F1	F	44	20.20	16	10	22.70	5.80	N/A	0.40		eCA0014	✔
Switch	eC3-TP-K-000104-16-12-P1-L	P	16	7.50	12	8.90	7	3	N/A	0.30		eCA0180	✔

SPEAKER

Device Type	Order Code	Style	W	F	P	AO	BO	KO	K1	T	22"	Drawing	Tool
Speaker	eC4-DET801B-24-12-P1-L	P	24	11.50	12	9.20	9.20	4	N/A	0.40		eCA0162	✔
Speaker	eC4-DET801C&G-24-12-F1-L	F	24	11.50	12	8.80	8.80	3.80	N/A	0.40		eCA0080	✔
Speaker	eC4-DET801D-24-12-P1	P	24	11.50	12	9.20	9.20	4.50	N/A	0.40		eCA0015	✔
Speaker	eC4-DET801E-24-16-P1-L	P	24	11.50	16	11	9	4.30	3.40	0.40		eCA0081	✔
Speaker	eC4-DET901C-24-16-P1-L	P	24	11.50	16	11.50	11.50	4.20	N/A	0.40		eCA0108	✔
Speaker	eC4-DET901D-24-16-F1-L	F	24	11.50	16	11.05	13.10	4	N/A	0.40		eCA0211	✔
Speaker	eC4-MET1402-24-24-P1	P	24	11.50	24	13.20	13.10	9.70	10.50	0.40		eCA0031	✔
Speaker	eC4-MPT13-24-24-F1-L	F	24	11.50	24	13	17	3.50		0.40		eCA0752	✔

 Copyright © 1999-2020 ePAK International, Inc.

CARRIER TAPE

MCM

Device Type	Order Code	Style	W	F	P	AO	BO	KO	K1	T	22"	Drawing	Tool
MCM3x4	eC3-MCM3x4-12-8-F1-L	F	12	5.50	8	3.30	4.30	1.40	N/A	0.30		eCA1411	✔
MCM0306	eC3-MCM0306-12-8-F1-L	F	12	5.50	8	3.35	5.35	1.60	N/A	0.30		eCA1160	✔
MCM3X8	eC3-MCM3X8-16-8-F1-L	F	16	7.50	8	3.35	8.38	1.40	N/A	0.30		eCA1331	✔
MCM3.5X3.5	eC3-MCM3.5X3.5-12-8-F1-L	F	12	5.50	8	3.80	3.80	1.50		0.30		eCA1280	✔
MCM3.5x4.5	eC3-MCM3.5x4.5-12-8-F1-L	F	12	5.50	8	3.85	4.85	1.30		0.30		eCA1557	✔
MCM3.65x4	eC3-MCM3.6504-12-8-F1-L	F	12	5.50	8	3.85	4.20	1.00	N/A	0.30		eCA1773	✔
MCM3.75x5.5	eC3-MCM3.755.5-12-8-F1-L	F	12	5.50	8	4.00	5.75	1.00	N/A	0.30		eCA1796	✔
MCM4.1x6.3	eC3-MCM4.16.3-12-8-F1-L	F	12	5.50	8	4.35	6.55	1.15	N/A	0.30		eCA1763	✔
MCM4.25x5.5	eC3-MCM4.255.5-12-8-F1-L	F	12	5.50	8	4.50	5.75	1.00	N/A	0.30		eCA1797	✔
MCM4.3x5.3	eC3-MCM4.35.3-12-8-F1-L	F	12	5.50	8	4.60	5.60	1.20	N/A	0.30		eCA1769	✔
MCM4.3x5.3	eC3-MCM4.35.3-12-8-F1-L	F	12	5.50	8	4.60	5.60	1.20	N/A	0.30		eCA1769	✔
MCM4.5x6.15	eC3-MCM4.56.15-16-8-F1-L	F	16	7.50	8	4.80	6.45	1.15	N/A	0.30		eCA1757	✔
MCM4.8x6.7	eC3-MCM4.8X6.7-16-8-F1-L	F	16	7.50	8	5.05	6.95	1.20	N/A	0.30		eCA1719	✔
MCM5x6x1.5	eC3-MCM5X6X1.5-12-8-F1-L	F	12	5.50	8	5.35	6.35	2	N/A	0.30		eCA0811	✔
MCM5x7	eC3-MCM5X7-16-8-F1-L	F	16	7.50	8	5.35	7.35	1.25		0.30		ECA1463	✔
MCM5X8	eC3-MCM5X8-16-8-F1-L	F	16	7.50	8	5.3	8.3	1.80	N/A	0.30		eCA0563	✔
MCM5.3x5.5	eC3-MCM5.35.5-12-8-F1-L	F	12	5.50	8	5.50	5.70	1.10	N/A	0.30		eCA1772	✔
MCM5.5x5	eC3-MCM5.5x5.0-12-8-F1-L	F	12	5.50	8	5.85	5.35	1.30		0.30		eCA1552	✔
MCM5.5x5	eC3-MCM5.5x5.0-12-8-F2-L	F	12	5.50	8	5.85	5.35	1.80		0.30		eCA1558	✔
MCM5.5x8.2	eC3-MCM5.58.2-16-8-F1-L	F	16	7.50	8	5.70	8.40	0.85	N/A	0.30		eCA1774	✔
MCM5.6x8.15	eC3-MCM5.6X8.15-16-8-F1-L	F	16	7.50	8	5.85	8.40	1.20	N/A	0.30		eCA1720	✔

Copyright © 1999-2020 ePAK International, Inc.

CARRIER TAPE

MCM (continued)

Device Type	Order Code	Style	W	F	P	AO	BO	KO	K1	T	22"	Drawing	Tool
MCM6X6	eC3-MCM0606-12-8-F3-L	F	12	5.50	8	6.35	6.35	1.59	N/A	0.30		eCA1350	✔
MCM6X8	eC3-MCM0608-16-8-F1-L	F	16	7.50	8	6.35	8.35	1.80	N/A	0.30		eCA0759	✔
MCM6X11	eC3-MCM6X11-24-12-F1-L	F	24	11.50	12	6.35	11.35	2	N/A	0.30		eCA0858	✔
MCM7X11	eC3-MCM7X11-24-12-F1-L	F	24	11.50	12	7.35	11.35	1.90	N/A	0.30		eCA1068	✔
MCM7.5X7.5	eC3-MCM7.5X7.5-16-12-F1-L	F	16	7.50	12	7.85	7.85	1.40	N/A	0.30		eCA1330	✔
MCM8.4x8.4	eC3-MCM8.48.4-16-12-F1-L	F	16.00	7.50	12.00	8.89	8.89	2.14	N/A	0.30		eCA1704	✔
MCM8.7x6.7	eC3-MCM8.7x6.7-16-12-F1-L	F	16	7.50	12	7.10	9.10	1.50	N/A	0.30		eCA1406	✔
MCM9X10	eC3-MCM9X10-24-12-F1-L	F	24	11.50	12	9.35	10.35	1.80	N/A	0.30		eCA0483	✔
MCM9x12	eC3-MCM0912-24-12-F2-L	F	24	11.50	12	9.30	12.30	2.00		0.30		ECA1472	✔
MCM9.6X10.6	eC3-MCM9.8X10.6-24-16-F1-L	F	24	11.50	16	10.15	10.95	2	N/A	0.30		eCA1105	✔
MCM9.8X10.6	eC3-MCM9.8X10.6-24-12-F1-L	F	24	11.50	12	10.15	10.95	2.00	N/A	0.30		eCA0933	✔
MCM10X8	eC3-MCM10X8-16-12-F1-L	F	16	12	12	8.35	10.35	2	N/A	0.30		eCA0512	✔
MCM10X11	eC3-MCM10X11-24-16-F1-L	F	24	11.50	16	10.35	11.35	2	N/A	0.30		eCA1053	✔
MCM10X14	eC3-MCM10X14-24-12-F1-L	F	24	11.50	12	10.35	14.35	2	N/A	0.30		eCA0484	✔
MCM10x14	eC3-MCM10X14-24-12-F2-L	F	24	11.50	12	10.35	14.35	1.30		0.30		eCA1572	✔
MCM11.4X15	eC3-MCM11.4X15-24-16-F1-L	F	24	11.50	16	11.70	15.30	2.90	N/A	0.30		eCA1344	✔
MCM9.8X10.6	eC3-MCM9.8X10.6-24-12-F1-L	F	24	11.50	12	10.15	10.95	2.00	N/A	0.30		eCA0933	✔
MCM10X6	eC3-MCM10X6-16-8-F1-L	F	16	11.50	8	6.35	10.35	1.35		0.30		eCA1279	

 Copyright © 1999-2020 ePAK International, Inc.

Carrier Tape
Part Number System

e X X - X X X X - X X - X X - X X - L

- L — Length (m)
- X X — Style code
- X X — Pocket pitch
- X X — Tape width
- X X X X — Device type and size
- X X — Tape thickness
- X — Material type
- e — ePAK product designation

COVER TAPE

ePAK COVER TAPE FAMILY-SELECTION GUIDE

ePAK Code	Seal Method	Length	Thickness	Material	Haze	Lum Trans	SR
S1	Heat	300m	0.056mm	M/PET	30%	91%	10e6-10e12
D1	Heat	200m	0.075mm	PE/PET	23%	90%	10e6-10e12
A1	Pressure	500m	0.045mm	PE	2%	85%	10e5-10e12

S1 SERIES
HEAT SEALED

Carrier Width	Order Code	Cover Width	Std Length
8	eH56-5.30-300-S1	5.30	300
12	eH56-9.20-300-S1	9.20	300
16	eH56-13.30-300-S1	13.30	300
24	eH56-21.30-300-S1	21	300
32	eH56-25.50-300-S1	25.50	300
44	eH56-37.50-300-S1	37.50	300
56	eH56-49.50-300-S1	49.50	300

Cover Tape
Part Number System

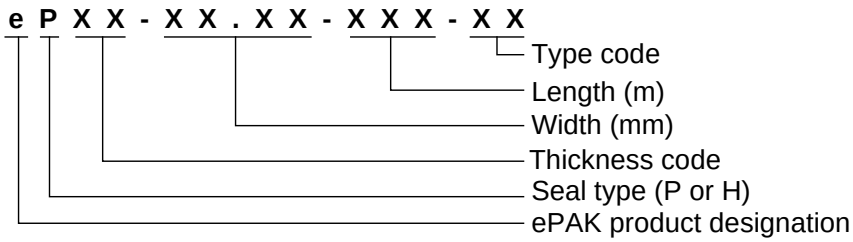

Copyright © 1999-2020 ePAK International, Inc.

COVER TAPE

D1 SERIES
HEAT SEALED

Carrier Width	Order Code	Cover Width	Std Length
8	eH75-5.25-200-D1	5.25	200
12	eH75-9.20-200-D1	9.20	200
12	eH75-9.30-200-D1	9.30	200
12	eH75-9.50-200-D1	9.50	200
16	eH75-13.30-200-D1	13.30	200
16	eH75-13.50-200-D1	13.50	200
24	eH75-21-200-D1	21	200
24	eH75-21.50-200-D1	21.50	200
32	eH75-25.50-200-D1	25.50	200
44	eH75-37.50-200-D1	37.50	200
56	eH75-49.50-200-D1	49.50	200
72	eH75-65.40-200-D1	65.40	200

A1 SERIES
PRESSURE SENSITIVE

Carrier Width	Order Code	Cover Width	Std Length
8	eP45-5.30-200-A1	5.30	200
12	eP45-9.30-500-A1	9.30	500
16	eP45-13.30-500-A1	13.30	500
24	eP45-21.30-500-A1	21.30	500
32	eP45-25.30-500-A1	25.30	500
44	eP45-37.30-500-A1	37.50	500
56	eP45-50.30-500-A1	50	500

Copyright © 1999-2020 ePAK International, Inc.

ePAK S1 Cover Tape on ePAK SOIC 8 Carrier Tape

Inner Layer Static Decay Performance(@+5KV)

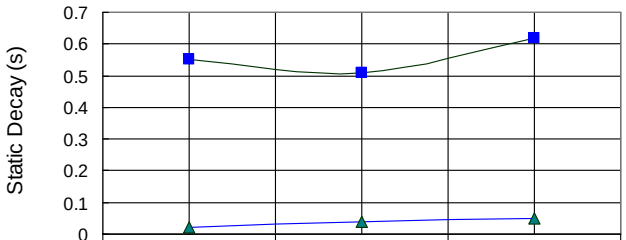

	SS #1	SS #2	SS #3
0 Hr	0.02	0.04	0.05
24 Hrs	0.55	0.51	0.62

Surface Resistivity Shelf Life Testing

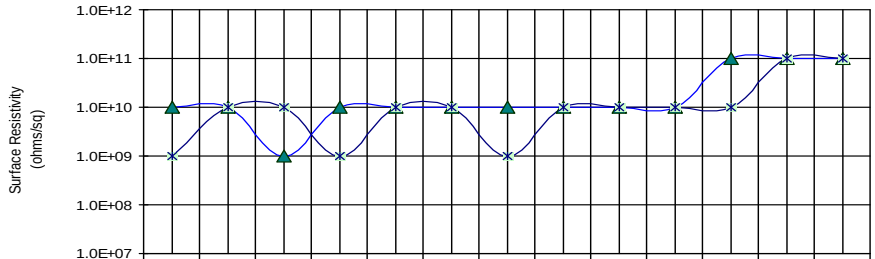

	0 day	1	3	7	14	21	30	45	60	90	180	270	360
Inner Layer	1.E+10	1.E+10	1.E+09	1.E+10	1.E+10	1.E+10	1.E+10	1.E+10	1.E+10	1.E+10	1.E+11	1.E+11	1.E+11
Outer Layer	1.E+09	1.E+10	1.E+10	1.E+09	1.E+10	1.E+10	1.E+09	1.E+10	1.E+10	1.E+10	1.E+10	1.E+11	1.E+11

Sealing Temperature Vs POS Trend

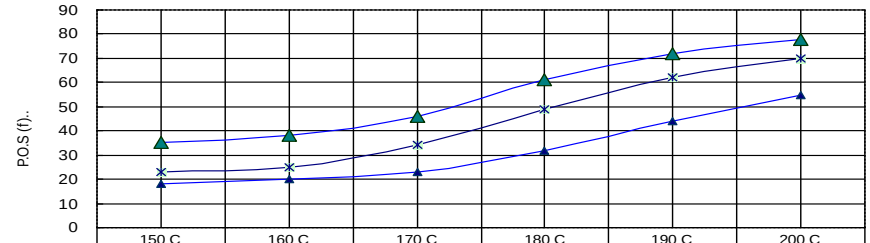

	150 C	160 C	170 C	180 C	190 C	200 C
Max	35	38	46	61	72	78
Min	23	25	34	49	62	70
Mean	18	20	23	32	44	55

S1 Cover Tape Room Condition Aging Performance

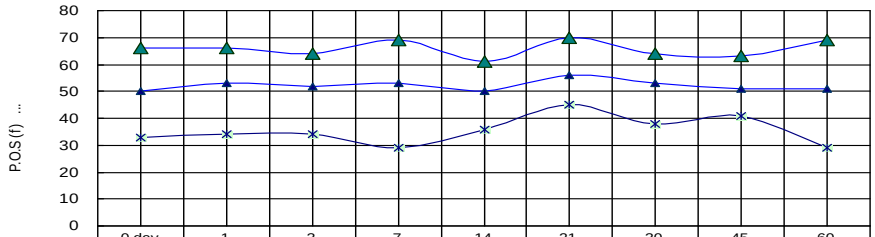

	0 day	1	3	7	14	21	30	45	60
Max	66	66	64	69	61	70	64	63	69
Min	33	34	34	29	36	45	38	41	29
Mean	50	53	52	53	50	56	53	51	51

TEST CONDITIONS

Carrier Tape	:eC3-SOIC08-12-8-P2
Cover Tape	:eH56-9.2-300-S1
Sealing Machine	:Systemation MT-30 with Reciprocating Mode
Sealing Pressure	:40Psi with 0.4 second sealing Time
Sealing Temperature	:160°C (for Aging Performance test)
Sealing Shoe	:0.018"with 7.5mm inner width
Peel Strength Tester	:GPDPBFT856

For Static Decay test:	23°C,12%perEIA-541
For S/R Shelf test:	Storage conditions 25°C,65%RH
Typical lab data shown	

Copyright © 1999-2020 ePAK International, Inc.

13 INCH REELS

7 INCH HUB “D” STYLE-2-PC LOCKING

Tape Width	Dia mm	Hub mm	Left Half Order Code	Right Half Order Code	Assembled Reel Order Code	Standard Packing Quantity
8	330	178	13/07-04-1-x	13/07-04-1-x	T08-13/07-D1-x	
12	330	178	13/07-04-1-x	13/07-08-1-x	T12-13/07-D1-x	50
16	330	178	13/07-08-1-x	13/07-08-1-x	T16-13/07-D1-x	50
24	330	178	13/07-08-1-x	13/07-16-1-x	T24-13/07-D1-x	40
32	330	178	13/07-16-1-x	13/07-16-1-x	T32-13/07-D1-x	20

Material options: eP28(HIPS,standard blue color)and eP26(MPPE,standard black color)

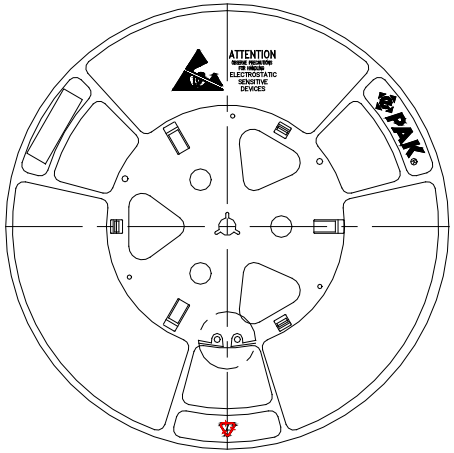

4 INCH HUB “D” STYLE–2-PC LOCKING

Tape Width	Dia mm	Hub mm	Left Half Order Code	Right Half Order Code	Assembled Reel Order Code	Standard Packing Quantity
8	330	101	13/04-04-3-x	13/04-04-3-x	T08-13/04-D3-x	
12	330	101	13/04-04-3-x	13/04-08-3-x	T12-13/04-D3-x	50
16	330	101	13/04-08-3-x	13/04-08-3-x	T16-13/04-D3-x	50
24	330	101	13/04-08-3-x	13/04-16-3-x	T24-13/04-D3-x	40
32	330	101	13/04-16-3-x	13/04-16-3-x	T32-13/04-D3-x	30
44	330	101	13/04-16-3-x	13/04-28-3-x	T44-13/04-D3-x	20
56	330	101	13/04-28-3-x	13/04-28-3-x	T56-13/04-D3-x	10

Material options: eP28(HIPS, standard blue color) and eP26(MPPE, standard black color)

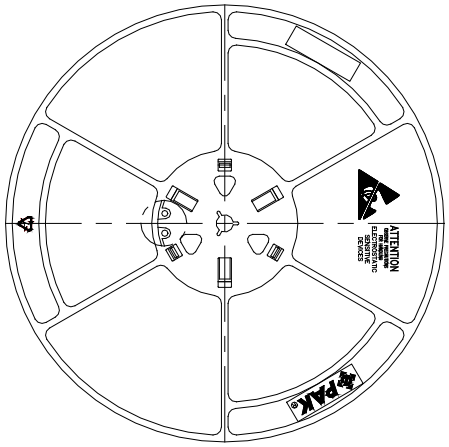

 Copyright © 1999-2020 ePAK International, Inc.

13 INCH REELS

4 INCH SLOT HUB "A" STYLE–2-PC LOCKING

Tape Width	Dia mm	Hub Mm	Left Half Order Code	Right Half Order Code	Assembled Reel Order Code	Standard Packing Quantity
8	330	100	13/04-04-1-x	13/04-04-1-x	T08-13/04-A1-x	
12	330	100	13/04-04-1-x	13/04-08-1-x	T12-13/04-A1-x	25
16	330	100	13/04-08-1-x	13/04-08-1-x	T16-13/04-A1-x	50
16	330	100	13/04-08-12-x	13/04-8-12-x	T16-13/04-A12-x	25
24	330	100	13/04-08-1-x	13/04-16-1-x	T24-13/04-A1-x	40
32	330	100	13/04-16-1-x	13/04-16-1-x	T32-13/04-A1-x	30
44	330	100	13/04-16-1-x	13/04-28-1-x	T44-13/04-A1-x	20
56	330	100	13/04-28-1-x	13/04-28-1-x	T56-13/04-A1-x	10

Material options: eP28(HIPS, standard blue color) and eP26 (MPPE, standard black color)

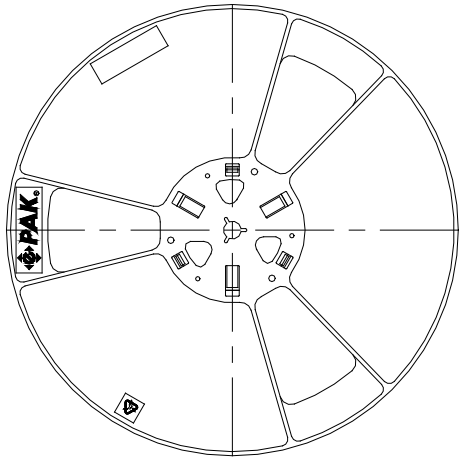

4 INCH SLOT HUB, "TYPE 35" STYLE–2-PC LOCKING

Tape Width	Dia mm	Hub Mm	Reel Assembly Hub inner width	Left Half Order Code	Right Half Order Code	Assembled Reel Order Code
8	330	101.5	8.4	13/04-04-35	13/04-04-35	T8-13/4-A35-BK
12	330	101.5	12.4	13/04-04-35	13/04-08-35	T12-13/4-A35-BK
16	330	101.5	16.4	13/04-08-35	13/04-08-35	T16-13/4-A35-BK
24	330	101.5	24.4	13/04-08-35	13/04-16-35	T24-13/4-A35-BK
32	330	101.5	32.4	13/04-16-35	13/04-16-35	T32-13/4-A35-BK

Material options: PS (standard black color) SR 10e8-10e11

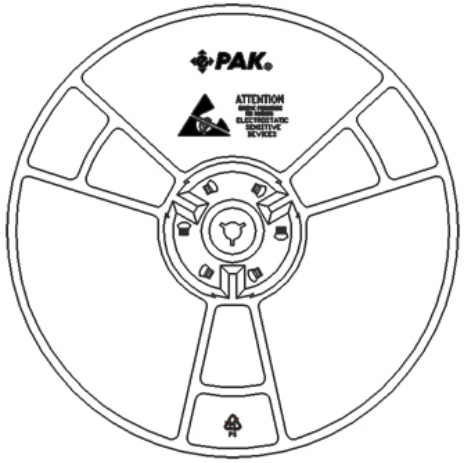

 Copyright © 1999-2020 ePAK International, Inc.

13 INCH REELS

6 INCH SNAIL HUB A STYLE–2-PC LOCKING

Tape Width	Dia mm	Hub mm	Left Half Order Code	Right Half Order Code	Assembled Reel Order Code	Standard Packing Quantity
44	330	150	13/04-16-3-x	13/04-28-3-x	S44-13/06-A4-x	20
44	330	150	13/04-16-3-x	13/04-28-3-x	S44-13/06-D4-x	20
44	330	127	13/04-16-3-x	13/04-28-3-x	S44-13/5-A24-x	20
44	330	127	13/04-16-3-x	13/04-28-3-x	S44-13/5-D24-x	20

Material options: eP28(HIPS, standard blue color) and eP26(MPPE, standard black color)

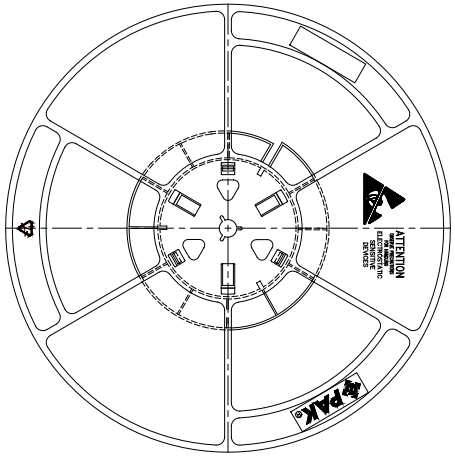

7 INCH SLOT HUB D STYLE–2-PC LOCKING

Tape Width	Dia mm	Hub mm	Left Half Order Code	Right Half Order Code	Assembled Reel Order Code	Standard Packing Quantity
8	330	178	13/7-4-10	13/7-4-10	T8-13/7-D10	
12	330	178	13/7-4-10	13/7-8-10	T12-13/7-D10	40
16	330	178	13/7-8-10	13/7-8-10	T16-13/7-D10	32
24	330	178	13/7-8-10	13/7-16-10	T24-13/7-D10	24
32	330	178	13/7-16-10	13/7-16-10	T32-13/7-D10	20

Material options: eP28(HIPS, standard black color), eP26(MPPE, standard black color)

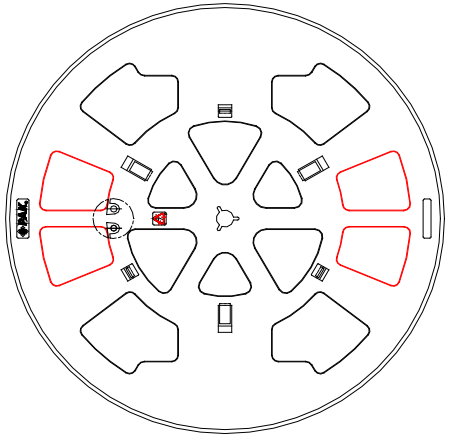

Copyright © 1999-2020 ePAK International, Inc.

13 INCH REELS

7 INCH SLOT HUB A STYLE–2-PC WELDED

Tape Width	Dia mm	Hub mm	Assembled Reel Order Code	Standard Packing Quantity
12	330	178	T12-13/7-A7-x	25
24	330	178	T24-13/7-A7-x	24

Material options: eP28(HIPS, standard black color)

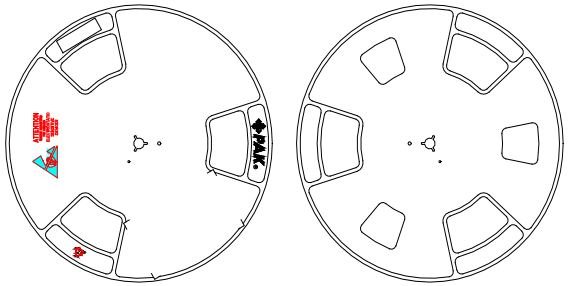

3 INCH SLOT HUB A STYLE–2-PC WELDED

Tape Width	Dia mm	Hub mm	Left Half Order Code	Right Half Order Code	Assembled Reel Order Code	Standard Packing Quantity
16	330	80	13/3-8-15	13/3-8-15	T16-13/3-C15-x	50
24	330	80	13/3-8-15	13/3-16-15	T24-13/3-C15-x	40
32	330	80	13/3-16-15	13/3-16-15	T32-13/3-C15-x	30

Material options: eP28(HIPS, standard black color)

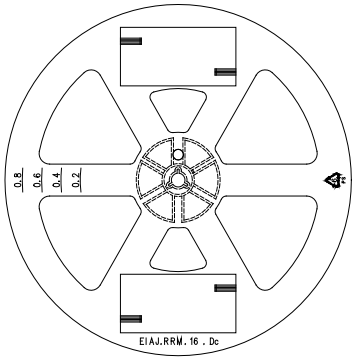

4 INCH SLOT HUB A STYLE–2-PC WELDED

Tape Width	Dia mm	Hub mm	Left Half Order Code	Right Half Order Code	Assembled Reel Order Code	Standard Packing Quantity
24	330	100	13/04-24-6-x	13/04-0-6-x	T24-13/04-A6-x	25

Material options: eP28(HIPS, standard black color)

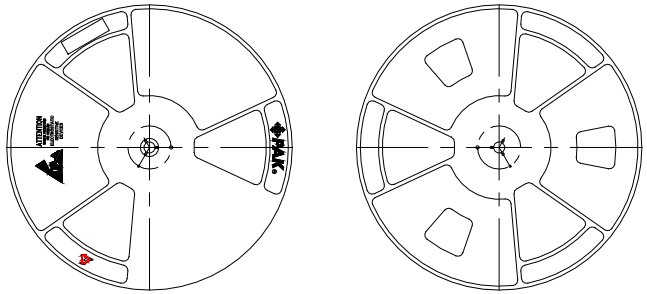

7 INCH REELS

7 INCH REELS–A1

Tape Width	Dia Mm	Hub mm	Assembled Reel Order Code	Standard Packing Quantity
8	178	51	T08-7/2-A1-x	200

Material options: eP28(HIPS)

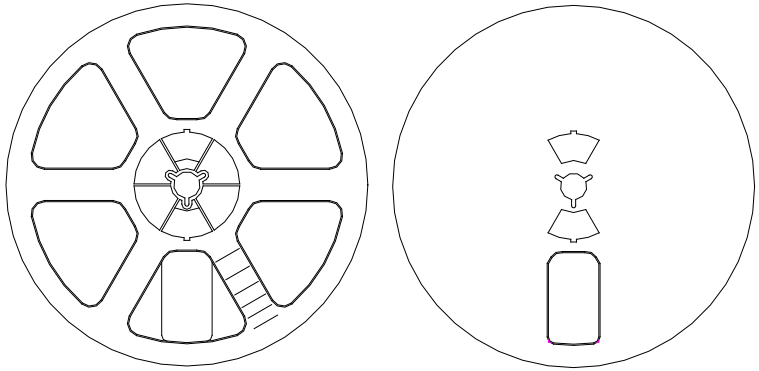

7 INCH REELS – A4/A6/A8

Tape Width	Dia mm	Hub mm	Assembled Reel Order Code	Standard Packing Quantity
8	178	60	T08-7/2.4-A4-x	200
8	178	60	T08-7/2.4-A6-x	200
8	180	60	T08-7/2.4-A8-x	200
12	180	60	T12-7/2.4-A2-x	200

Material options: eP28(HIPS)

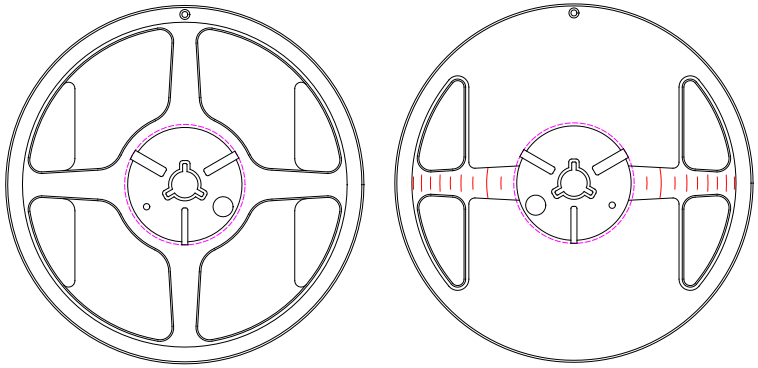

Copyright © 1999-2020 ePAK International, Inc.

PART NUMBER SYSTEM
ePAK REELS

PRE-ASSEMBLED AND SINGLE PIECE REELS	T X X - X / X - X X - X X Color code Material and style code Hub diameter (inch) Reel diameter (inch) Tape width (mm) Hub style

HALF-REEL COMPONENTS	X / X - X X - X X - X X Color code Material and style code Reel half width Hub diameter (inch) Reel diameter (inch)

 Copyright © 1999-2020 ePAK International, Inc.

LOCATIONS

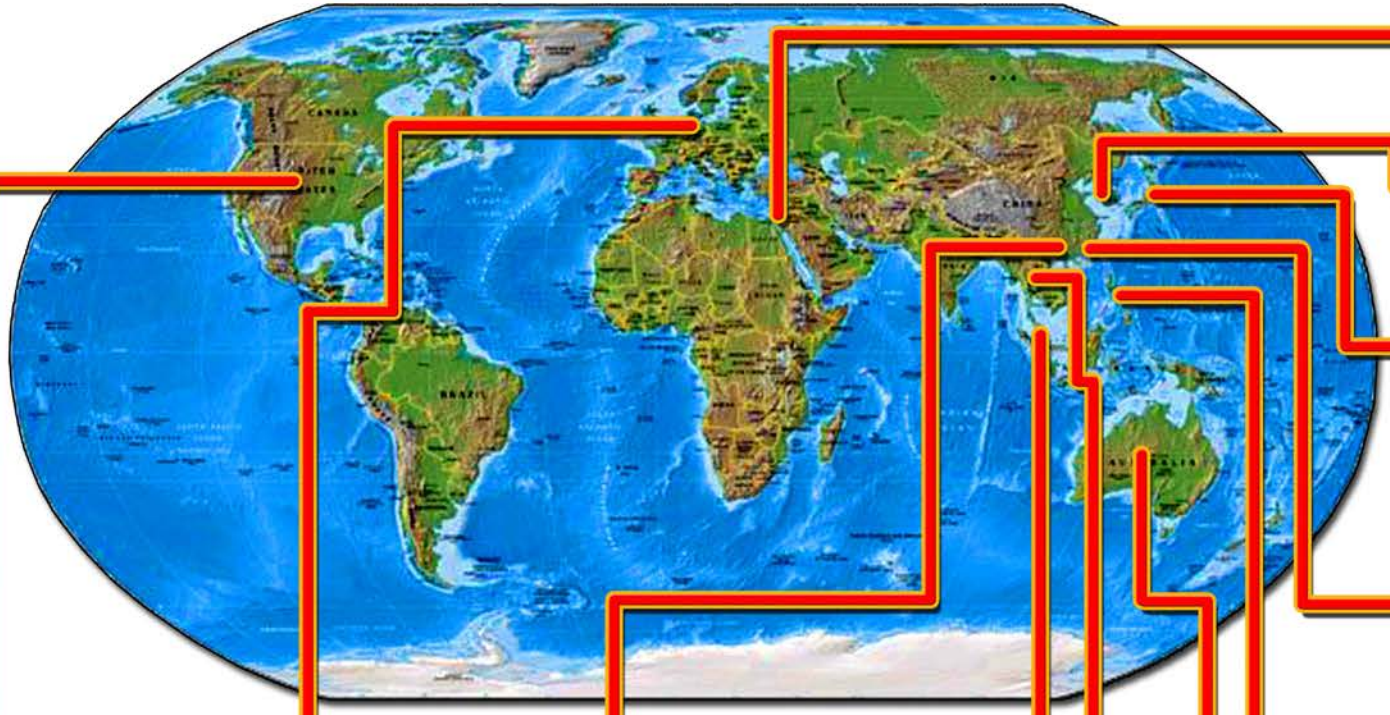

M.Y.G. Tech
Israel
Phone: +972-8 9760620
Fax: +972-8-9760621

ePAK Korea
Seoul, Korea
Phone: +822-401-2627
Fax: +822-401-2618

Kangawa Shoji
Japan Head Office:
Phone: (81) 936610360
Fax: (81) 936618552
Hong Kong Office:
Phone: +852-2380-0196
Fax: +852-2380-1050

ePAK Taiwan
Taipei, Taiwan
Phone: +886-2-291-49591
Fax: +886-2-291-49597

ePAK Philippines
Manila, Philippines
Phone: +63-908-815-8322
Land: +63-49-302-5812

MMRC Pty Ltd.
Australia
Phone:+61-3-9885-1752
Fax: +61-3-9885-2603

ePAK International, Inc.
Austin, Texas, U.S.A.
Phone: +1-512-231-8083
Fax: +1-512-231-8183

SPS-Europe
Europe
Phone: +31 341 360590
Fax: +31 341 360589

ePAK Solutions (SZ) Co.,Ltd.
ePAK Technologies (SZ) Co.,Ltd.
Shenzhen, China
Phone: +86-755-3382-7888
Fax: +86-755-2862-1452

NSI(Thailand) Co., Ltd.
Thailand
Phone: 02-663-3070-2
Fax: 02-663-3073

Jas Pak (S) Pte., Ltd.
Thailand
Phone: +65 6481 0045
Fax: +65 6483 0045

ePAK Resources (S) Pte Ltd.
Singapore
Phone: +65-6846-9908
Fax: +65-6547-4269

Litetronics (S) Pte Ltd.
Singapore
Phone: +65-6842-7889
Fax: +65-6842-7229

Koike (M) Sdn Bhd
Malaysia
Phone: +603-31763923
Fax: +603-31763923

Copyright © 1999-2020 ePAK International, Inc.